VisualCAM© 2015 for Geomagic TURN Quick Start

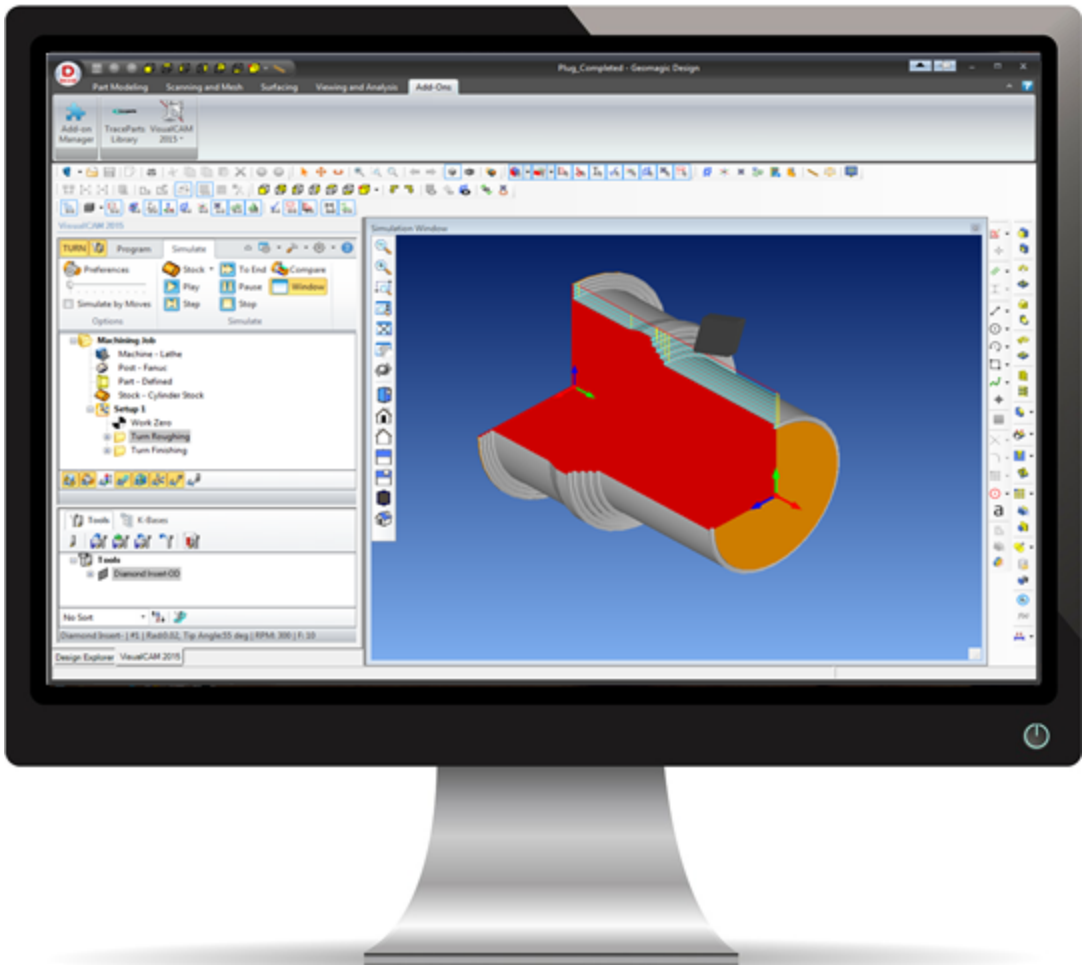

Table of Contents

About this Guide 4

1 About the TURN Module ... 4
2 Using this Guide ... 4
3 Useful Tips ... 5

Getting Ready 7

1 The VisualCAM 2015 for Geomagic Security Key ... 7
2 Running VisualCAM 2015 for Geomagic ... 7
3 Machining Strategy ... 8
4 Main Programming Steps ... 8
5 Loading the Part Model ... 8
6 Launching the TURN Module ... 11
7 Define the Machine Tool ... 13
8 Select the Post Processor ... 15

Define the Machine Setup 19

1 Define the Part Geometry ... 19
2 Create Stock Geometry ... 22
3 Align Part and Stock ... 25
4 Specify Material ... 27
5 Machining Setup ... 30
6 Set Work Zero ... 31

Create Tools 34

Roughing the Outer Diameter 38

1 Select Cutting Tool ... 38
2 Set Feeds and Speeds ... 40
3 Set Clearance Geometry ... 41
4 Set Global Parameters ... 43
5 Set Roughing Parameters ... 43
6 Set Entry/Exit Parameters ... 44
7 Simulate the Toolpath ... 48

Finishing the Outer Diameter 55

1 Set Finishing Parameters ... 56

2 Simulate the Toolpath 62
3 Post Processing 64

Generating Reports 68

1 Generating Shop Documentation 69

Where to go for more help 73

Index 74

About this Guide

1.1 About the TURN Module

The VisualCAM 2015 for Geomagic TURN module offers fast gouge free solids/surface model machining technology coupled with cutting simulation/verification capabilities for programming 2 Axis CNC Lathes, running inside Geomagic. This integration allows for seamless generation of toolpath and cut material simulation/verification inside Geomagic for programming CNC lathes that support 2 axis machining.

The module also comes with numerous post-processors to output the programmed G-code to some of the most popular machines in the market. A simple and well thought out user interface makes this system one of the most intuitive and easy to use turning systems in the market.

You can work with the native Geomagic design data as well as use any of the data types that can be imported into Geomagic such as solids, surfaces and meshes. Then you can use the VisualCAM 2015 for Geomagic TURN module with its wide selection of tools and tool path strategies to create machining operations and associated tool paths for 2 Axis Lathes. These tool paths can then be simulated and verified, and finally post-processed to the controller of your choice.

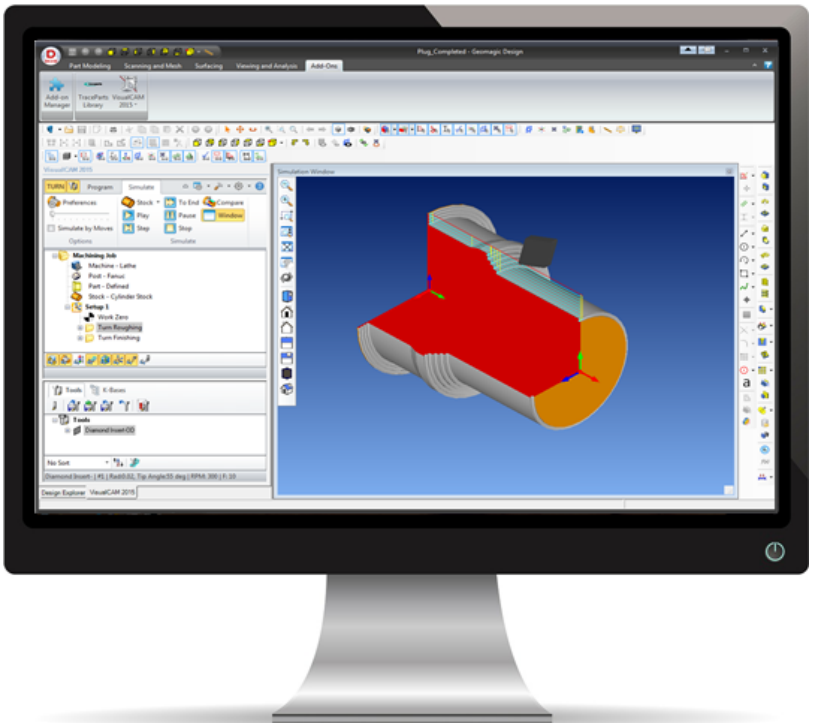

1.2 Using this Guide

If you have installed VisualCAM 2015 for Geomagic successfully on your computer and are now looking at the blank screen of VisualCAM 2015 for Geomagic and wondering what to do next, this is the guide for you. This guide will explain how to get started in using the

VisualCAM 2015 for Geomagic TURN module to program a simple part through an example.

This guide will illustrate how to machine a part using Turn Roughing and Finishing operations. Even though we are using a 3D model, it will become apparent as we go that we can machine this part using just a 2-D curve revolved about the Turn rotational axis to produce the 3D part. Since all parts that can be created in a 2-Axis lathe are solids or surface of revolutions, it is enough to describe the profile that needs to be revolved to create this shape.

This guide has two associated VisualCAM 2015 for Geomagic files that you can find located in the QuickStart folder under the installation folder of this guide. The first file is a completed file that contains all of the completed toolpaths and machining operations and represents the file that you should end up with after working through the tutorial. The other file is a starter file that contains only the geometry. Use the completed file as a reference. Copy the starter file and use this file to begin each tutorial.

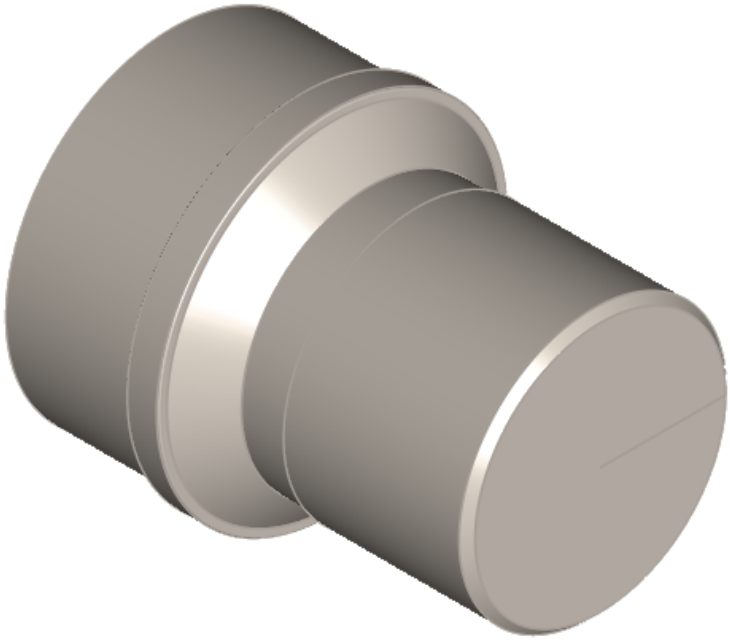

TURNQuickStartTutorial.AD_PRT

1.3 Useful Tips

Here are some useful tips that will help you use this guide effectively.

1. Copy the tutorial part files in a location other than the installation folder to make sure you have read/write privileges to the files.
2. Once you start working with the tutorial file, save your work periodically!
3. Once you start working with the tutorial file, save your work periodically!
4. Don’t stress out too much if you are having trouble with the tutorial. Call us or send us

email and we can help you out.

5. Most of all have fun!

Getting Ready

2.1 The VisualCAM 2015 for Geomagic Security Key

In order for VisualCAM 2015 for Geomagic to function fully it requires a security device, called a hardware key or a dongle.

Without the security device, VisualCAM 2015 for Geomagic will operate only in Demo mode. When VisualCAM 2015 for Geomagic is operating in demo mode you will still be able to run the software but will not be able to do the following:

- Save CAM data to Geomagic Design files
- Post-process created tool paths

In order for VisualCAM 2015 for Geomagic to operate fully the security key needs to be properly installed on your computer or network. Please follow the instructions that came with your installation program on how to do this.

2.2 Running VisualCAM 2015 for Geomagic

Locate the Geomagic Design shortcut on your desktop and double click to launch the application.

Alternatively you can also click on the Windows Start button and select All Programs. Go to the program group containing Geomagic Design. (The name of this program group will usually be called Geomagic Design, unless you specified otherwise during setup.)

Once you locate the program group, select it and then select Geomagic Design to launch the application.

If the installation was successful, upon launching of Geomagic Design and opening a Part document you should observe a ribbon bar entry called VisualCAM 2015 in the Add-ons tab of the Geomagic Design ribbon bar.

If you do not see this menu entry then please check the On Line Help document of the product (found in the installation folder) for help with trouble shooting the installation.

> VisualCAM 2015 for Geomagic only operates in the Part mode of Geomagic. If you are running in the Drawing or Assembly mode of Geomagic you will not

see VisualCAM's menu bar loaded in the Geomagic ribbon bar.

2.3 Machining Strategy

Based on the type of geometry of this part, we will machine this model out of a cylindrical aluminum blank that is 3 inches diameter and a minimum length of 3 ¼ inches. As the part has only features on the outer diameter (OD) to be machined, we will machine this out by using a Turn Roughing and a Finishing operation. We will also use just a single diamond insert with a 20 degree relief angle and 0.02 inch tip radius with 0.5 inch inscribed circle radius for performing all machining. We will also assume that the cylinder blank will be held on the chuck over to the left side on the CNC lathe.

2.4 Main Programming Steps

The following steps will be followed in machining this model. Some of these steps will have to be performed just once and others may have to be repeated to complete the machining.

1. Define the Machine and Post Processor to use.
2. Define the Part and Stock Geometry, Material and Work Zero.
3. Create and Select a Tool to use for machining
4. Create the Machining Operations including the Feeds and Speeds, the Clearance Geometry and other Cutting Parameters.
5. Generate the toolpaths.
6. Simulate the toolpaths.
7. Post Process the toolpaths.
8. Generate Shop documentation.

2.5 Loading the Part Model

The Part typically is the geometry that represents the final manufactured product.

1. Select File / Open from the Menu.

2. From the Open dialog box, select the TURNQuickStartTutorial.AD_PRT file from the C:\ProgramData\MecSoft Corporation\VisualCAM 2015 for Geomagic\QuickStart\

folder. As mentioned before, it is advisable to make a copy of this part at a suitable alternative folder so that you have write privileges to modify the part.

By default, the ProgramData folder is "hidden" from view. Here are the steps to Show hidden files and folders:

1. For Windows7/8 users: Go to Control Panel > Appearance and Personalization > Folder Options (Windows XP users can locate folder options under Control Panel).
2. Select View tab and under advanced settings select Show Hidden files and folders, clear the check boxes for:
   - Hide extensions for known file types
   - Hide protected operating system files (Recommended)

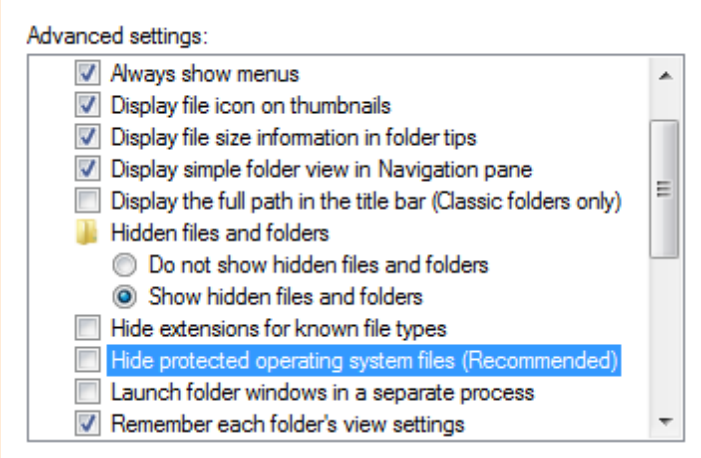

3. Click Apply and OK.

The part appears as shown below

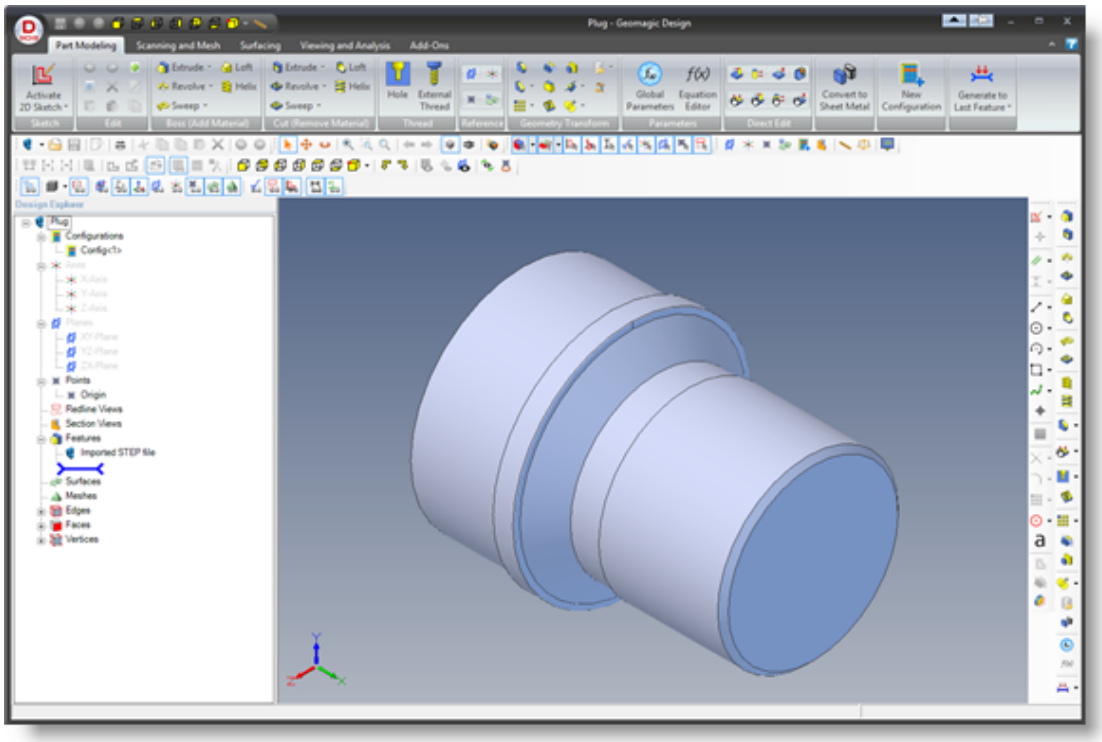

TURNQuickStartTutorial.AD_PRT

> You can import 2D drawings, Solid, Surface and Mesh models that are supported in Geomagic.

2. You will find that the VisualCAM 2015 pane is added to the Add-Ons ribbon bar in Geomagic Design.

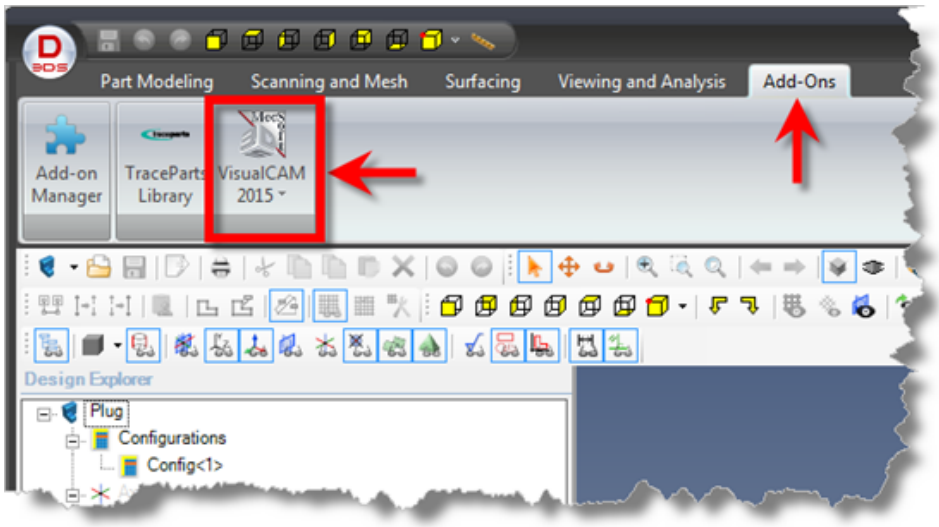

2.6 Launching the TURN Module

Follow the procedure below to launch the VisualCAM 2015 for Geomagic TURN module:

1. Select TURN from the VisualCAM 2015 menu located on the Add-Ons ribbon bar in Geomagic Design.

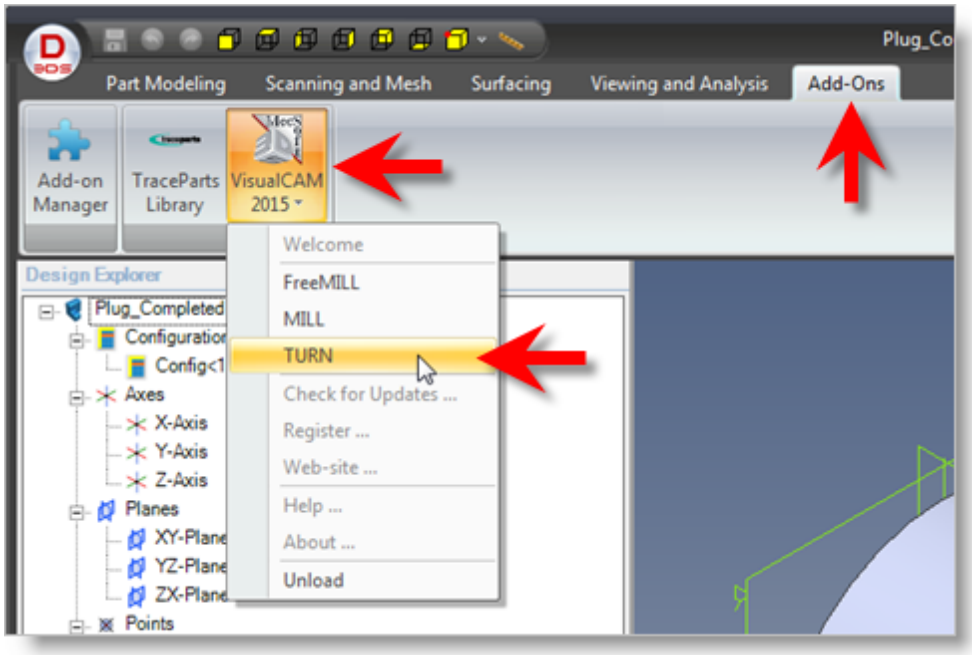

2. You will see two dialogs, one called the Machining Browser and the other called the Machining Objects Browser displayed on a separate tab labeled VisualCAM 2015 next to the Design Explorer tab

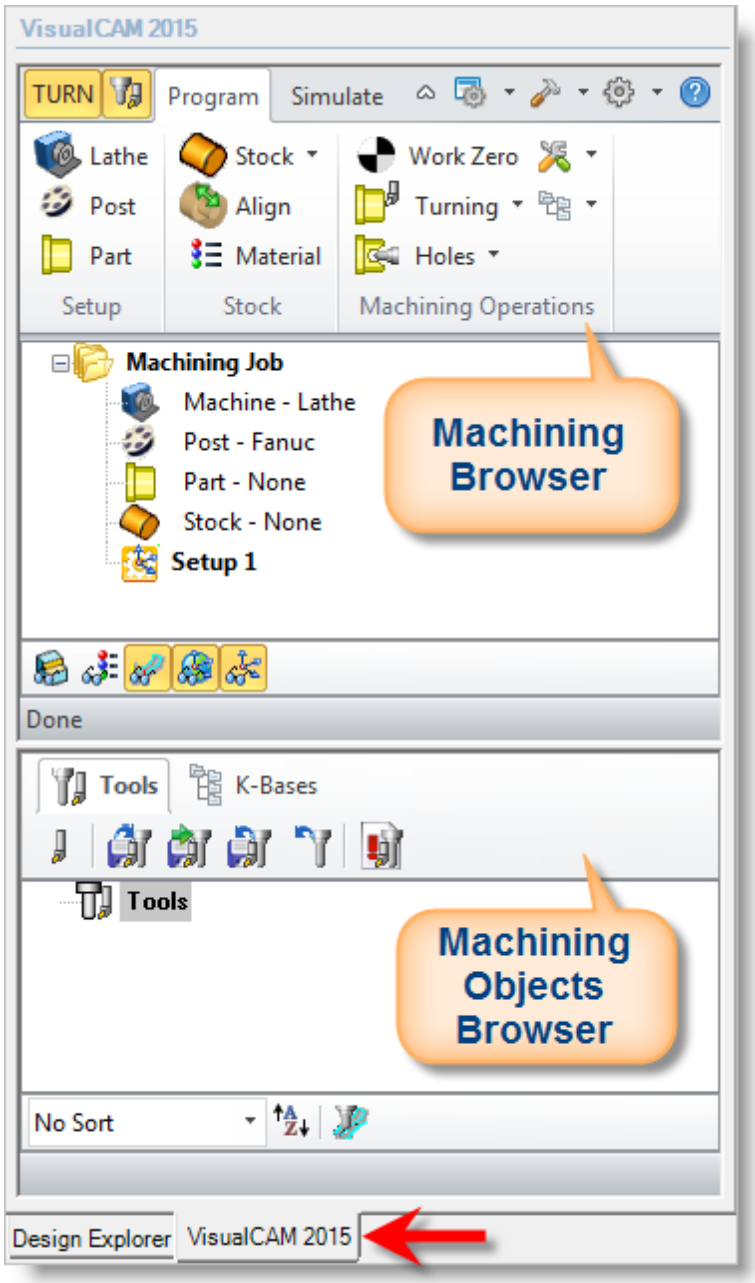

The Machining Browser is also referred to as the Machining Operations Browser or the MOps Browser. The Machining Objects Browser is also referred to as the MObs Browser.

3. You can also re-size the height and width of each browser making sure that all of the command icons and menus are easily accessible.

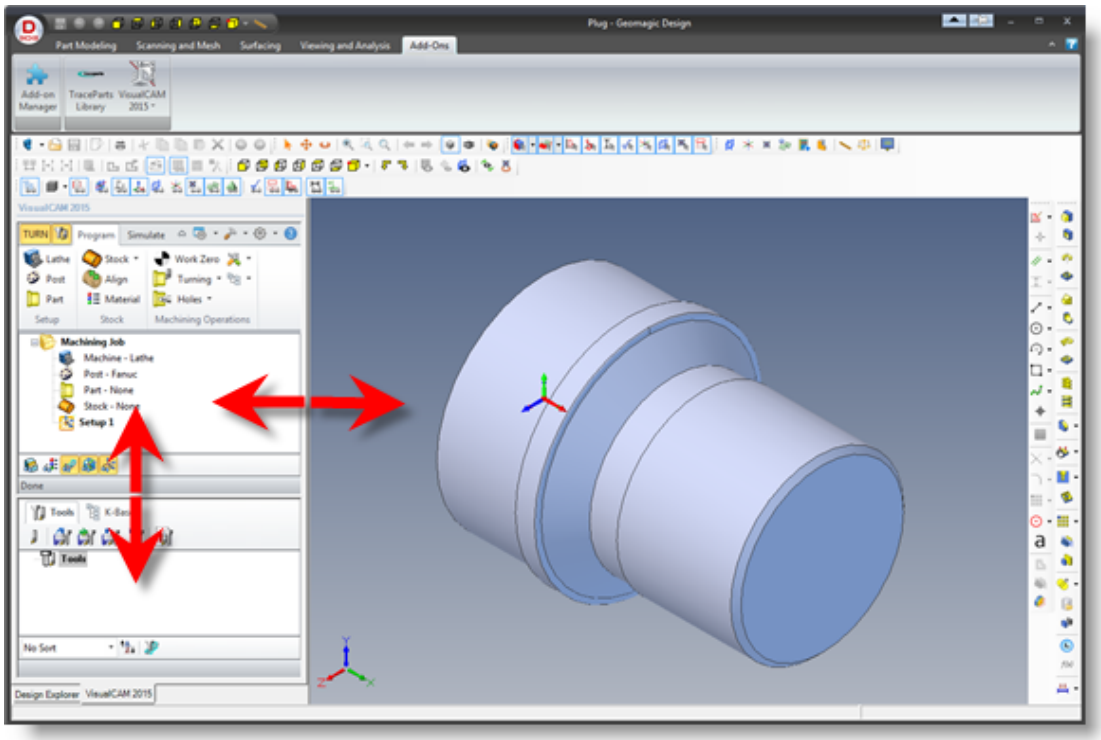

2.7 Define the Machine Tool

The first step in the machining process is to define the machine tool to use.

1. Select the Program tab from the Machining Browser and pick Lathe to display the Machine Tool Setup dialog.

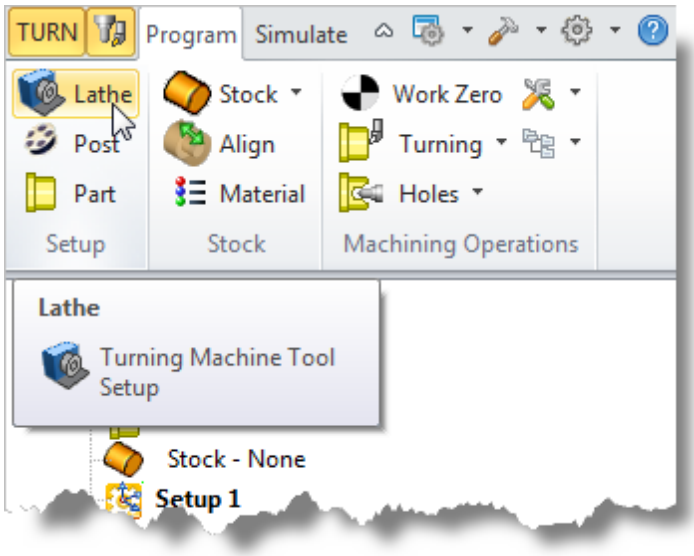

2. Select the Machine Tool Coordinate System tab. This dialog allows you to setup the Machine Tool Coordinate System (MCS).

In this tutorial we use the default alignment of the Machining Coordinate System, wherein the Z axis of the MCS system is aligned with the X axis of the World Coordinate System (WCS) and the X axis of the MCS coincides with the Y axis of the WCS.

So no further action is necessary. However, you can use the controls in this dialog to align the MCS to the desired orientation if the default orientation does not meet your requirements.

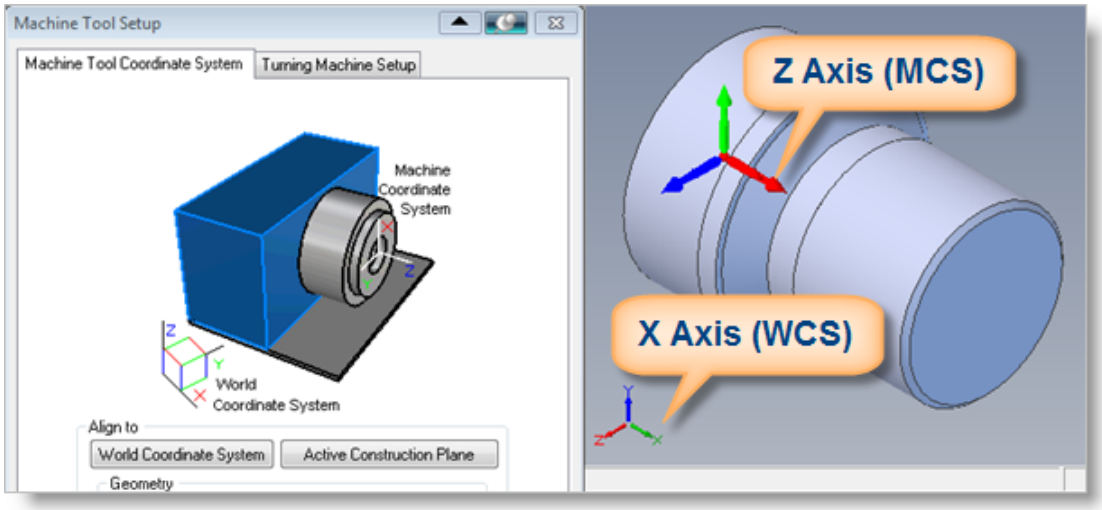

Typically in 2 axes Lathes, the rotary axis of the lathe is considered the Z axis while the axis perpendicular to it and pointing upwards is considered the X axis. The TURN module also follows this convention and requires 2D geometry used for toolpath programming as well as the toolpath coordinates to be on this ZX plane of the MCS.

3. Now select the Turn Machining Setup tab. This tab allows you to setup some machine tool control parameters.
4. Set the Maximum RPM to 10000.

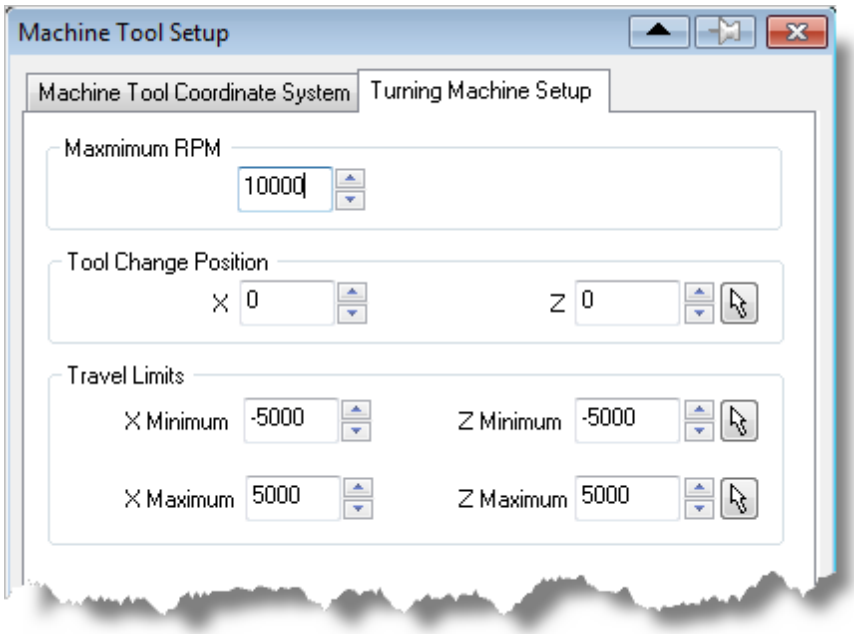

5. Click OK and notice that Machine - Lathe now appears under Machining Job in the Machining Browser.

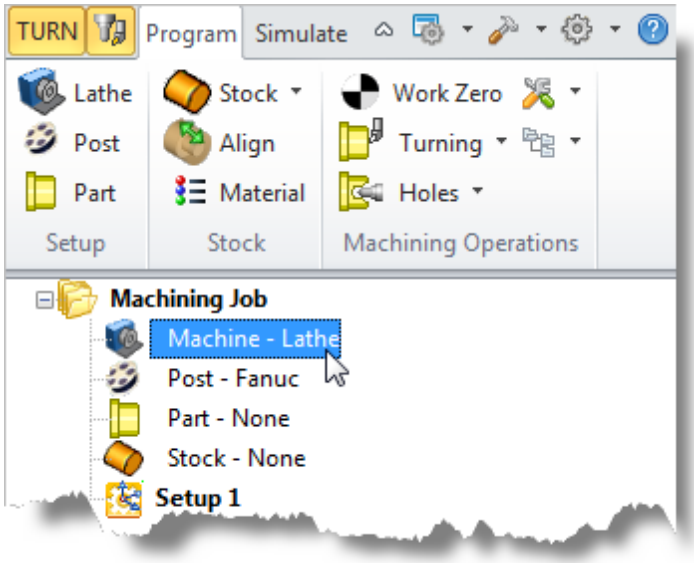

2.8 Select the Post Processor

Next, we'll define the Post Processor.

1. From the Program tab select Post to display the dialog.

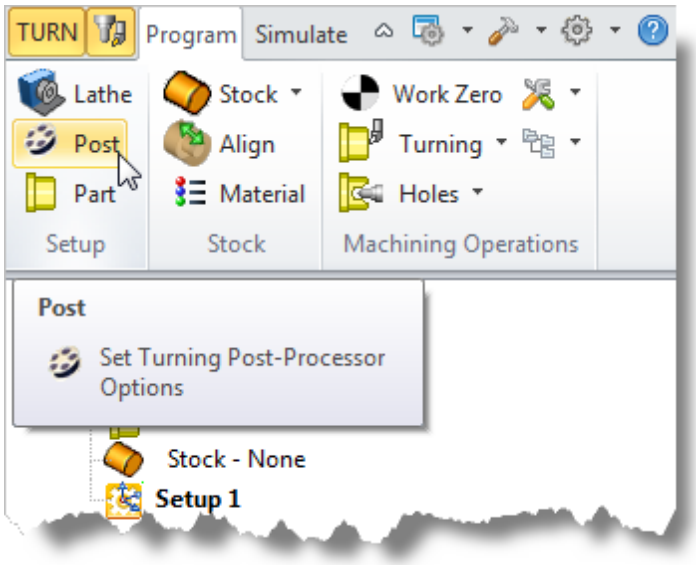

2. For the Current Post Processor, select Fanuc from the list of available posts.
3. Then set the Posted File Extension to .nc. Other file extensions are available depending on your machine requirements.

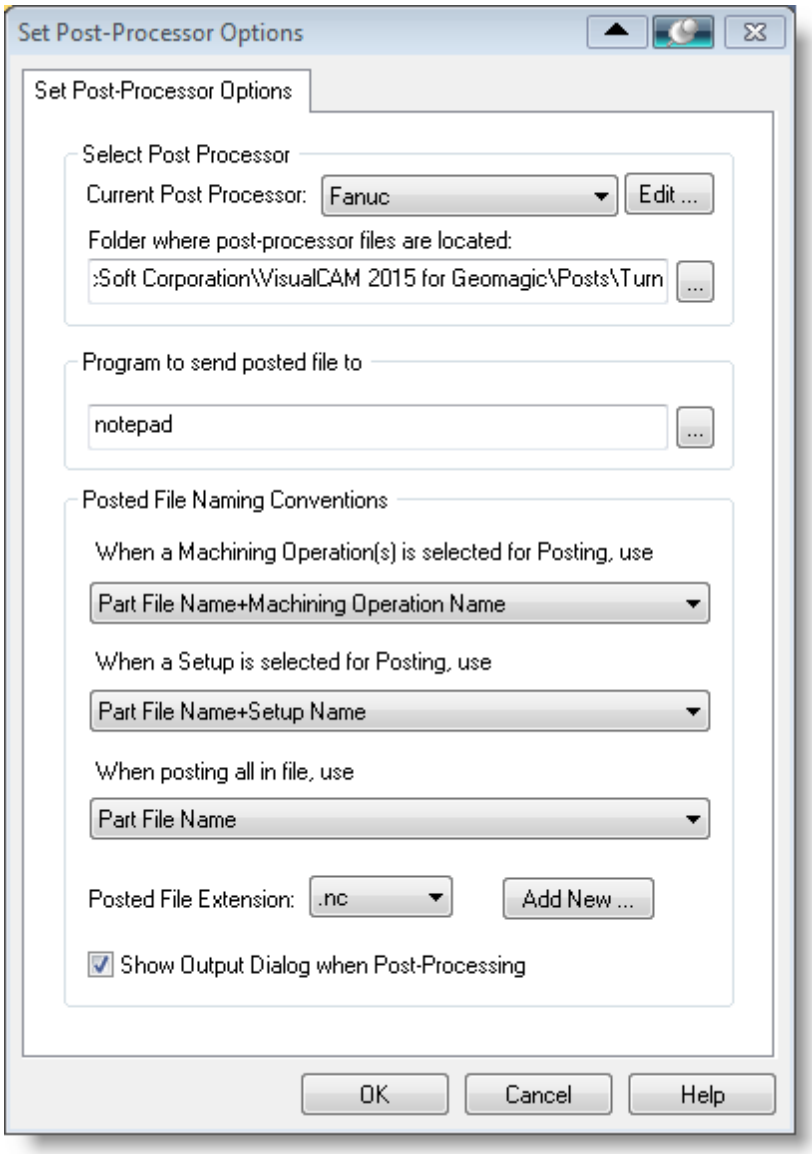

4. Pick OK and notice that the Post type now appears under Machining Job in the Machining Browser.

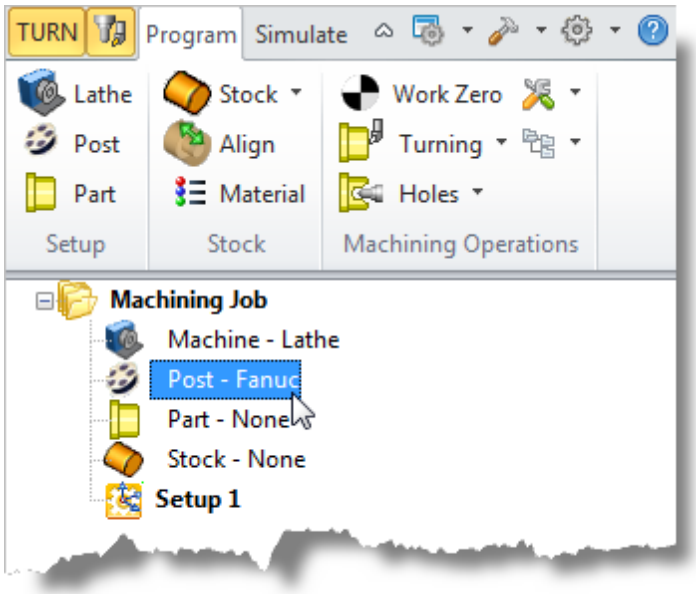

By default, post processor files are located under:
C:\ProgramData\MecSoft Corporation\VisualCAM 2015 for Geomagic\Posts\TURN\
The program to send the posted output is set to notepad.

Define the Machine Setup

3.1 Define the Part Geometry

Now we'll define the part geometry. Part Geometry constitutes the end product of the manufacturing operation. The TURN module requires you to select Solid/surfaces/polygon meshes or curves that defines the part geometry. Once selected this part geometry will be used for all machining operations.

1. From the Program tab select Part to display the dialog.

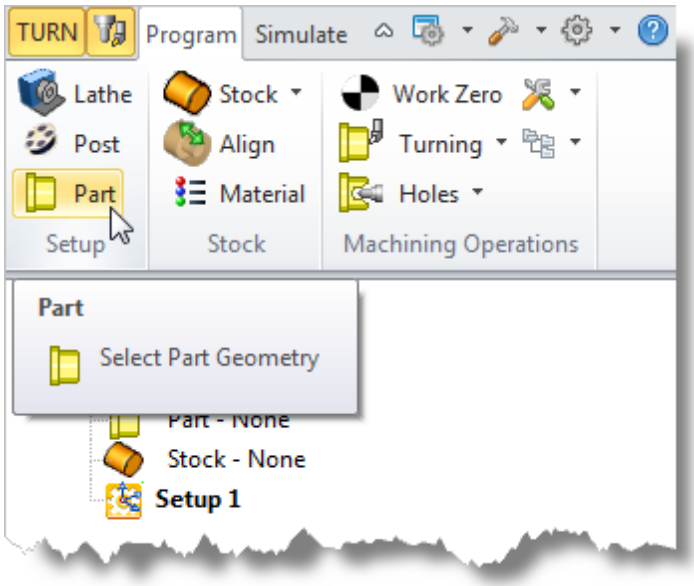

2. Pick the Select Surfaces(s) button.

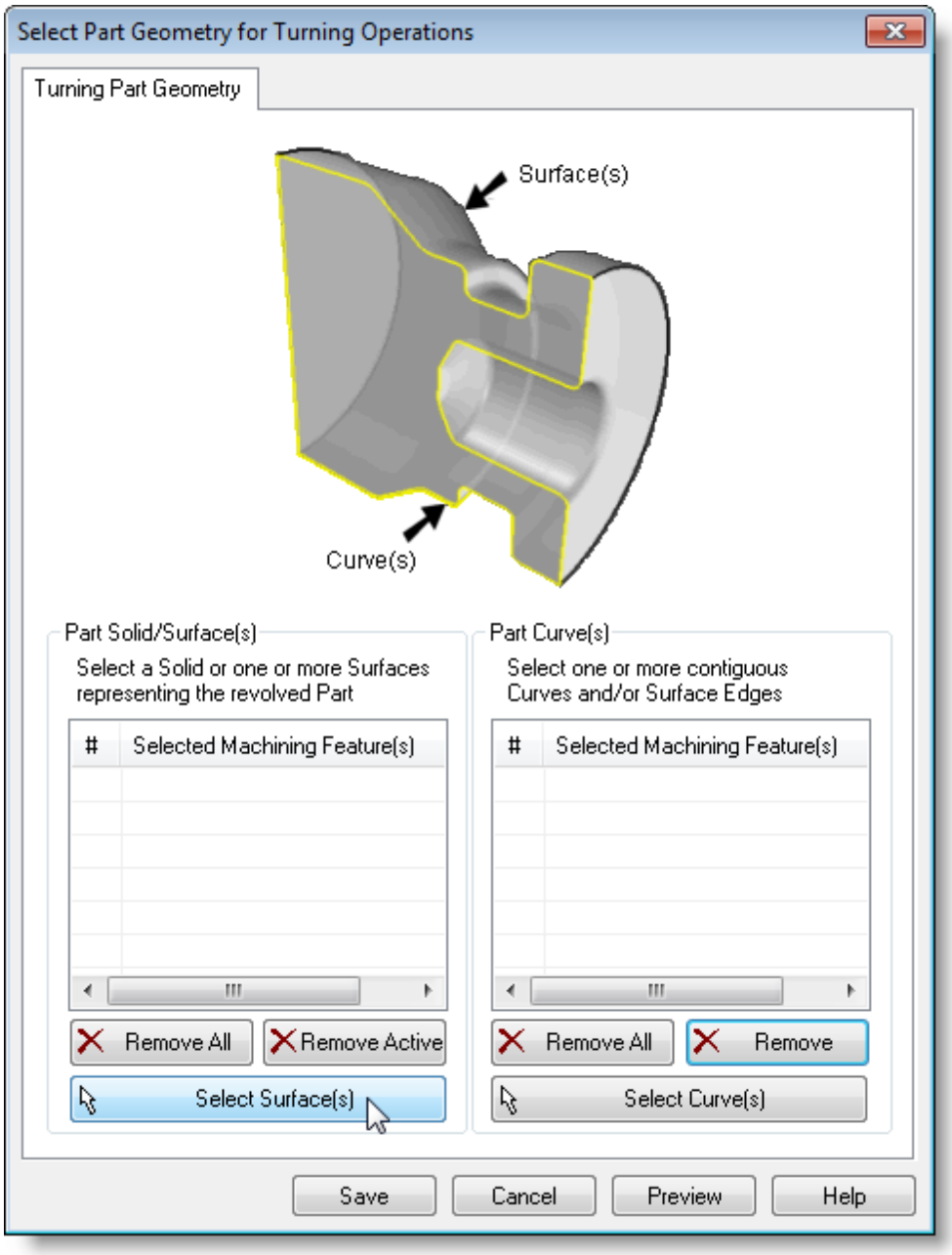

3. The dialog is minimized and allows us to select Part Objects.
4. Press Ctrl+A to select all geometry and then pick the icon to complete the selection.
5. The dialog reappears and lists the selected surfaces under Selected Machining Features.

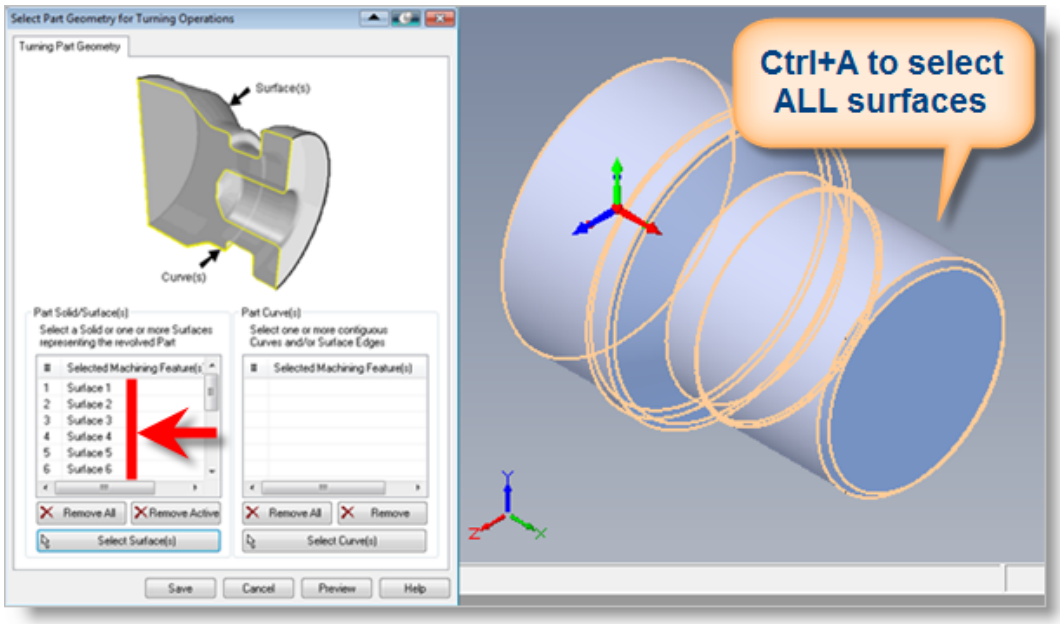

6. Now pick Save.
7. The Part is now defined and listed under the Machining Job in the Machining Browser.

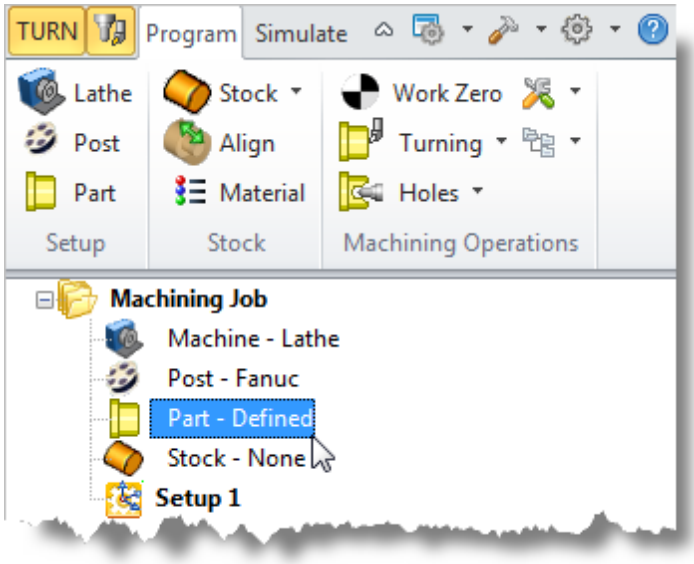

8. Now select Part - Defined from the Machining Job in the Machining Browser. You can see the actual 2D profile that was created to use in toolpath computations.

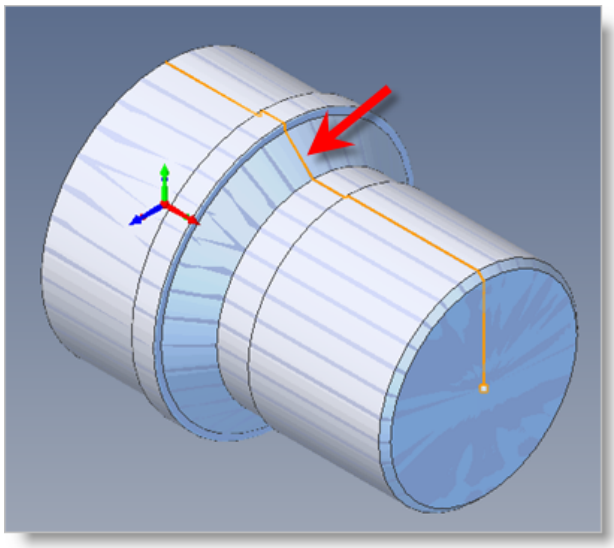

If surfaces are selected as part geometry, the system will slice the selected surfaces with the ZX plane of the Machine Coordinate System (MCS) and use the resultant curves as the actual profile to be machined in the lathe.

Alternatively you can perform the slicing using CAD tools and select just the resultant curve as the part profile. If you select a curve to represent the Part, make sure the curve is a 2D curve that lies in the ZX plane of the MCS. By default the ZX plane is the same as the XY plane of the World Coordinate System.

3.2 Create Stock Geometry

In this step we'll define the raw stock from which to cut the part.

1. From the Program tab select Stock and then select Cylinder Stock from the menu to display the dialog.

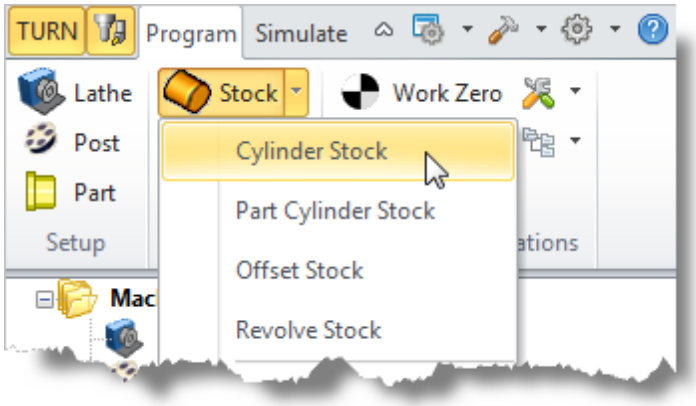

2. Under Outer Dimensions, set Radius (R) to 1.5 and Length (L) to 3.25.

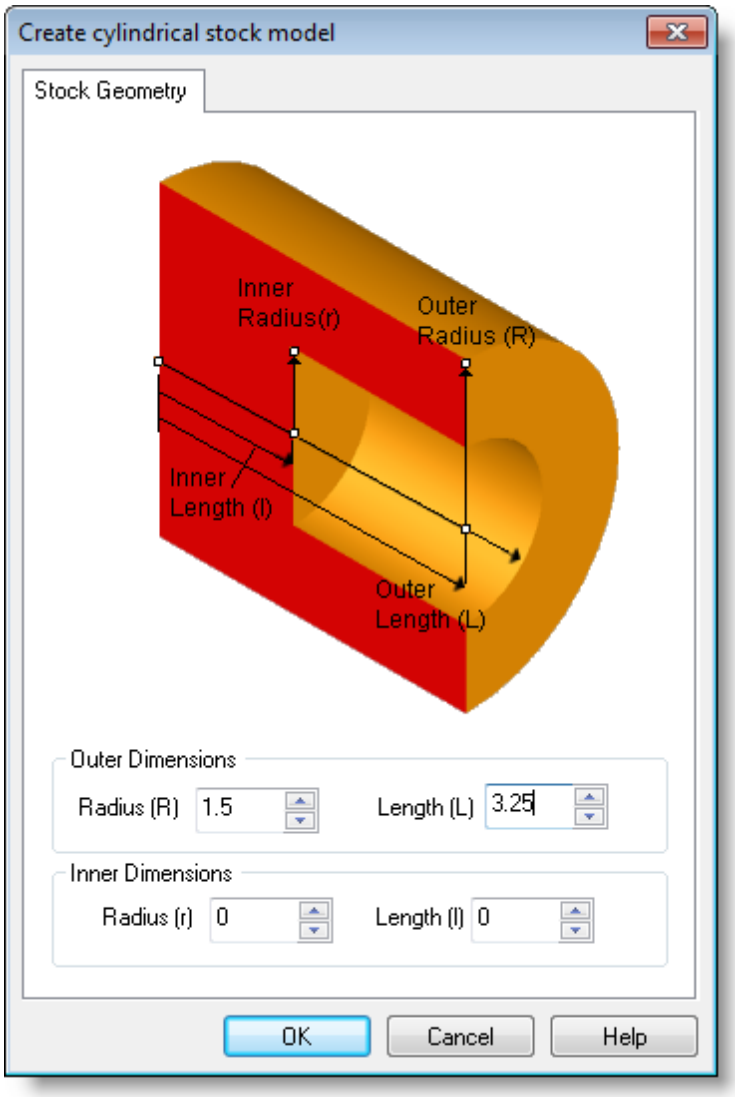

3. Pick OK and notice that Stock - Cylinder Stock type now appears under Machining Job in the Machining Browser.

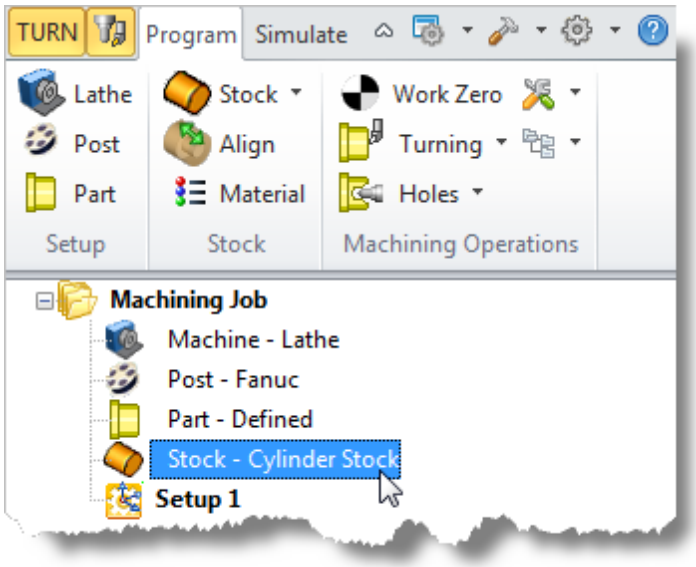

4. If the stock does not display on the screen when selecting Stock - Cylinder Stock from the Machining Browser, select the Stock Visibility icon located at the base of the Machining Browser.

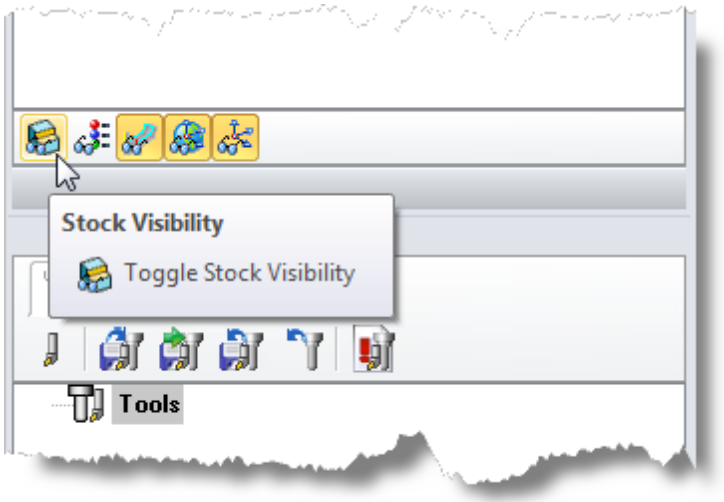

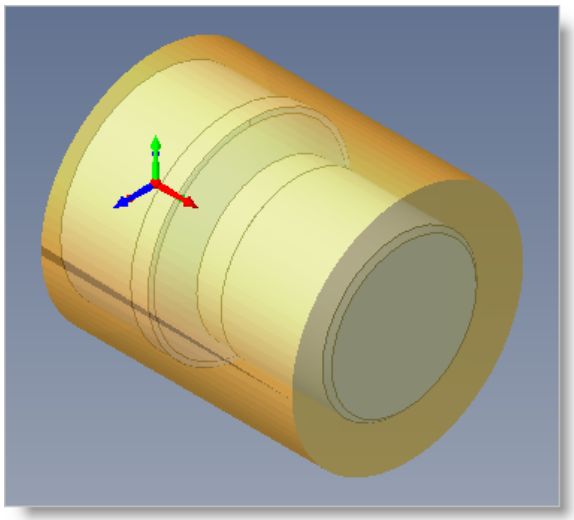

3.3 Align Part and Stock

Once the stock model is created you can move it in alignment with the part if needed.

1. From the Program tab select Align.

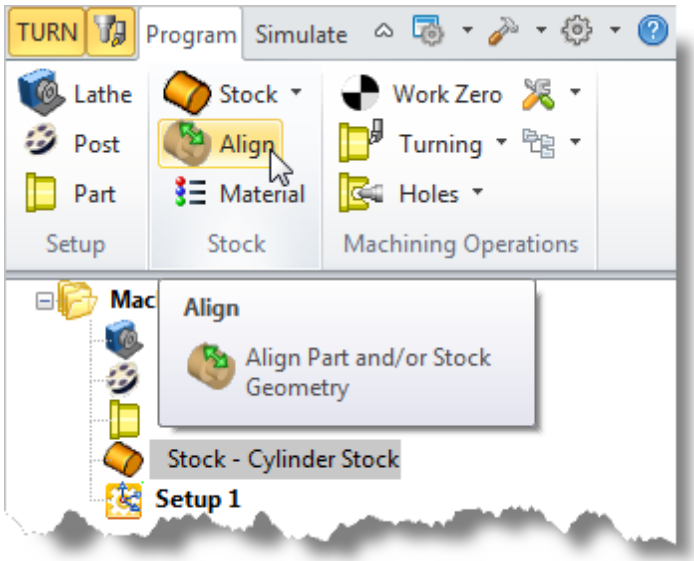

2. For Z Alignment select Right and then pick OK.

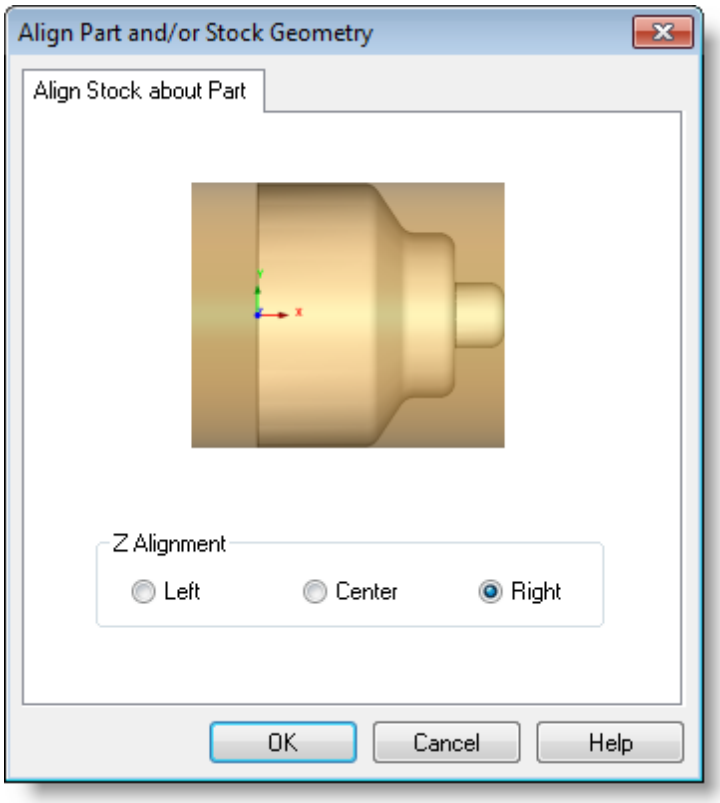

3. If you switch to the Front View, you see that the stock is now aligned to the right side face of the part geometry in the Z axis of the lathe.

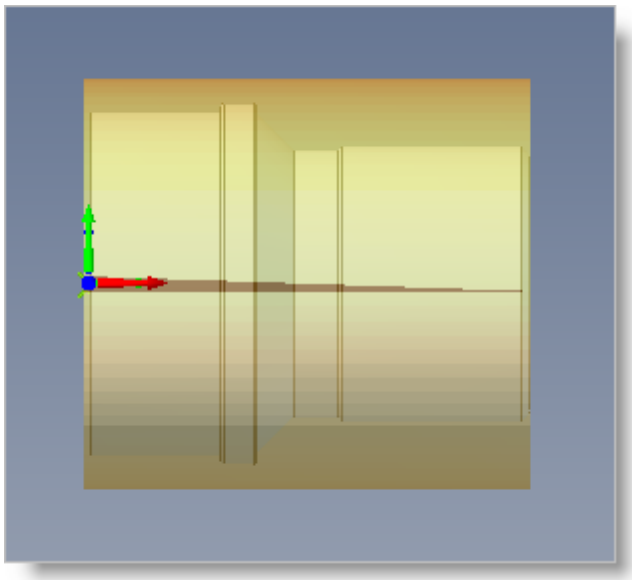

3.4 Specify Material

We will now set the material for the stock geometry. The material definition can be used for display purposes as well as to compute feeds and speeds values for machining.

1. From the Program tab select Material to display the dialog.

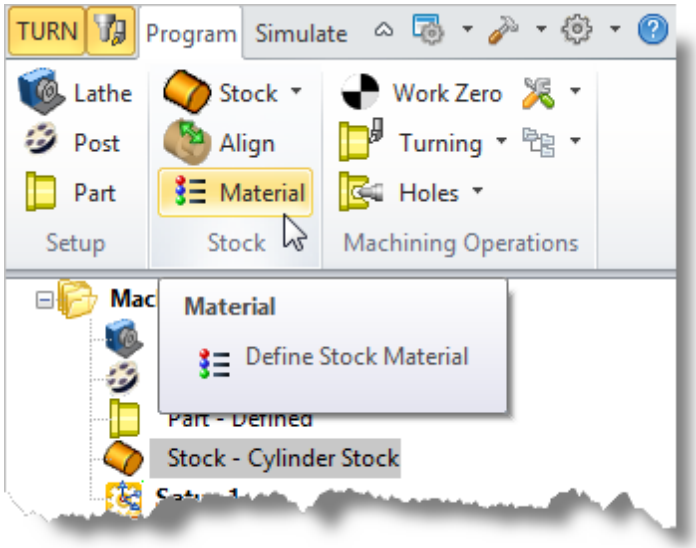

2. For Material, select Aluminum-6061 from the list of available materials and then pick OK.

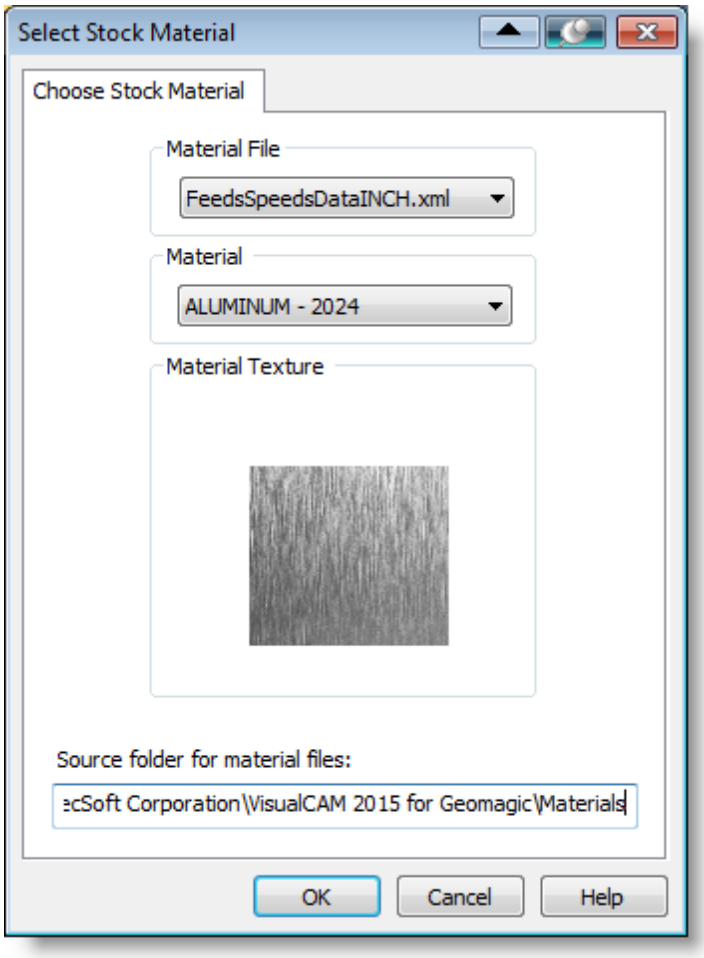

3. The material texture is now assigned to the Stock geometry. The texture is applied to the stock model within the Simulation Window. Note that while the Simulation Window is displayed you can turn the Material Texture on and off by selecting the Material Texture Visibility icon located at the base of the Machining Browser.

> Note: VisualCAM 2015 for Geomagic uses a separate window to perform and render the cut material simulation. To bring up this window, select the Simulation tab from the Machining Browser and select the Window icon as shown below:

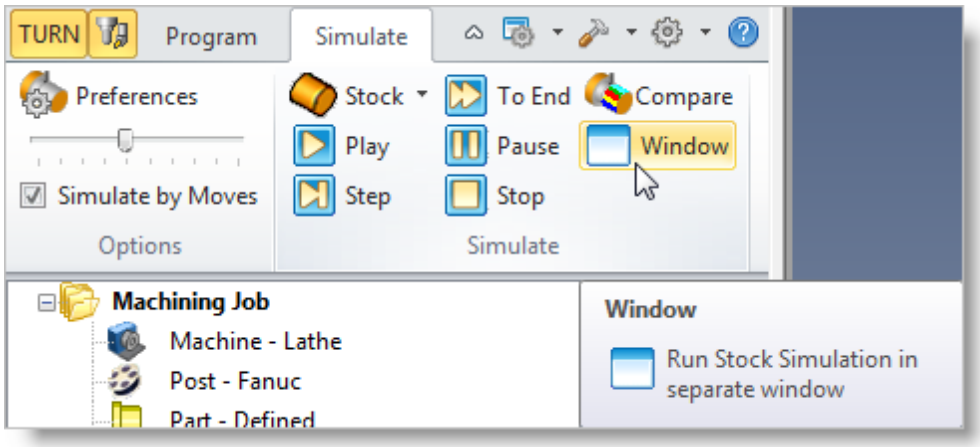

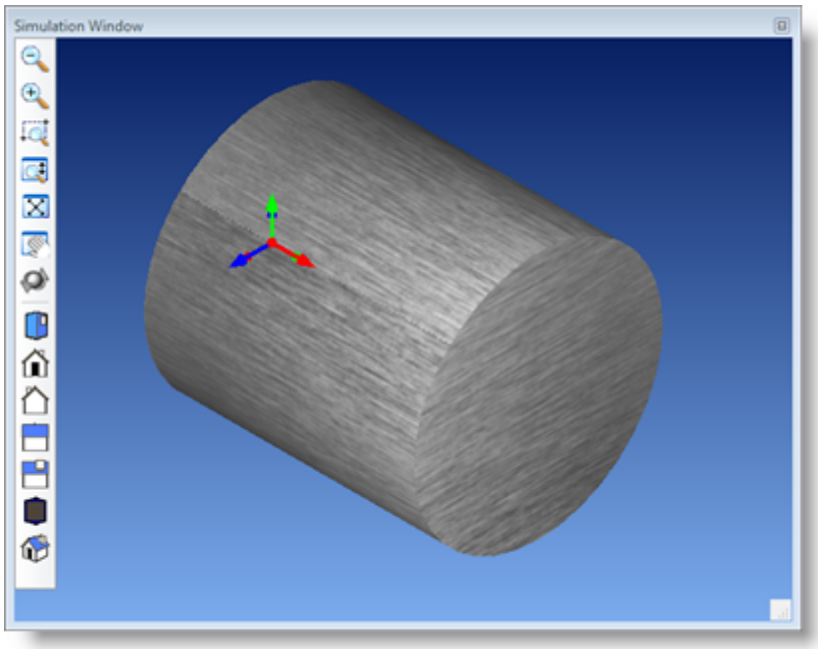

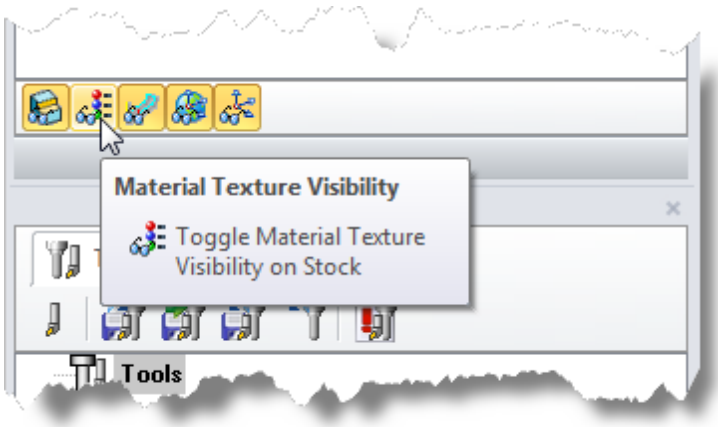

3.5 Machining Setup

Now let's discuss the Machining Setup.

The Setup icon (Setup 1) displayed in the Machining Job tree defines the Turn Machine Coordinate System or (MCS) and is defined automatically. CNC Turning centers or Lathes use the Cartesian coordinate system for programmed coordinates.

They follow the convention that the spindle axis of rotation is designated as the Z axis. The axis perpendicular to this axis along which the tool travels to cut into the stock is designated as the X axis.

So the part and spindle rotate about the Z-axis and moving the tool along the Z-axis provides the direction of feed and moving it along the X-axis provides the depth of cut.

By default, in the TURN module, the lathe Z axis is aligned with the World X axis and the lathe X axis is aligned with the World Y axis. (The Lathe Y axis points in the same direction of the World Z axis.)

The Turn Machine Coordinate System (MCS) is displayed as a triad with a **Red** Z-axis, a **Green** X-axis and a **Blue** Y-axis. The World Coordinate System or (WCS) is displayed the same way.

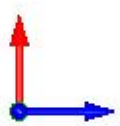

MCS

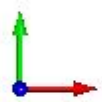

WCS

Orientation Parallel to	Triad Display States		
	MCS Visibility ON WCS Visibility OFF	MCS Visibility ON WCSVisibility OFF	MCS Visibility ON WCS Visibility ON
Top View	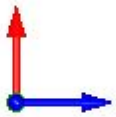		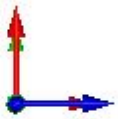

Geomagic also displays the World Coordinate System at the lower left corner of the screen. This triad only shows the orientation of the WCS and not the location. The WCS displayed by VisualCAM for Geomagic shows both the orientation and the location. The WCS triad displayed by Geomagic has the axes letters next to the arrows.

By default Setup 1 is created when a new part is loaded. The MCS of this setup has the Z axis aligned with the X axis of the WCS and the X axis of the MCS aligned with the Y axis of the WCS. That is the world XY plane is the same as the Lathe ZX plane. This cannot be changed. When creating a part profile, create it in the XY plane of the WCS.

3.6 Set Work Zero

This is used to define the work-piece origin. The Work Zero translates the Machine Coordinate System (MCS) origin from the origin defined in the Setup to the desired location. This can be set to any location along the lathe Z axis. Typically this is set to the right most face of the part or stock geometry on the lathe Z axis.

The Work Zero defines the zero point from which all toolpath points are interpreted by the controller. This would normally be the same as the tool touch off point on the actual work-piece on your machine. So care should be taken to make sure that this Work Zero point matches the tool zero point used on the actual work piece located in your machine.

1. From the Program tab select Work Zero to display the dialog.

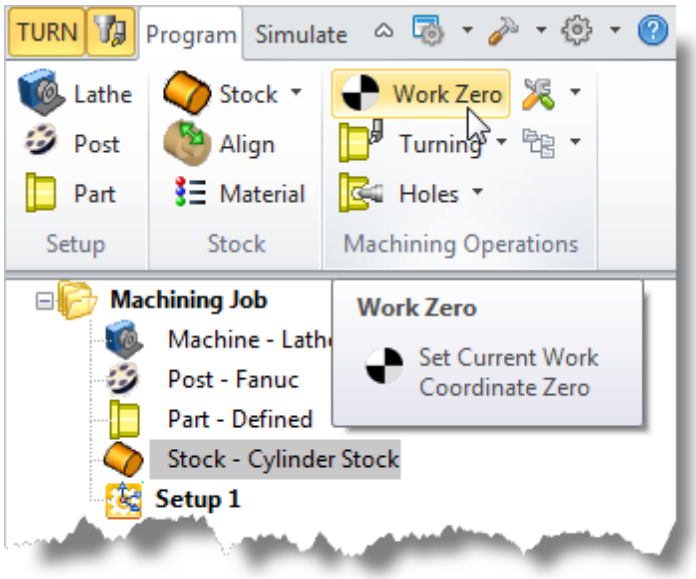

2. Select Set to Stock Box and set the Zero Face to Right Most. This locates the machine origin point to the right most face of the stock geometry along the lathe Z axis.

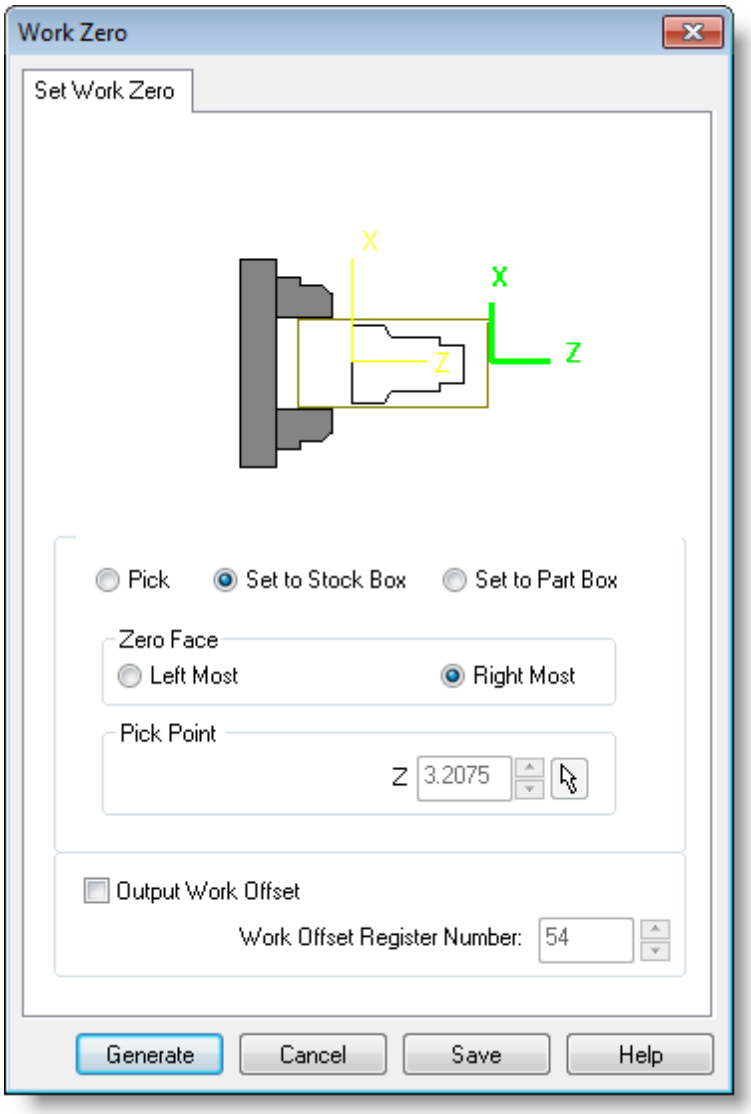

3. Pick Generate and notice that the MCS is translated and that the Work Zero now appears under Setup 1 in the Machining Browser.

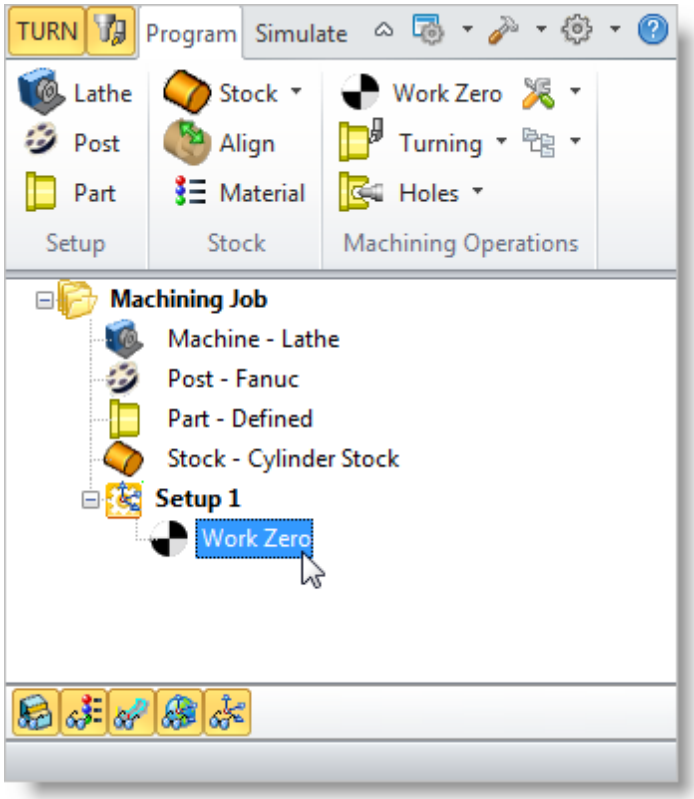

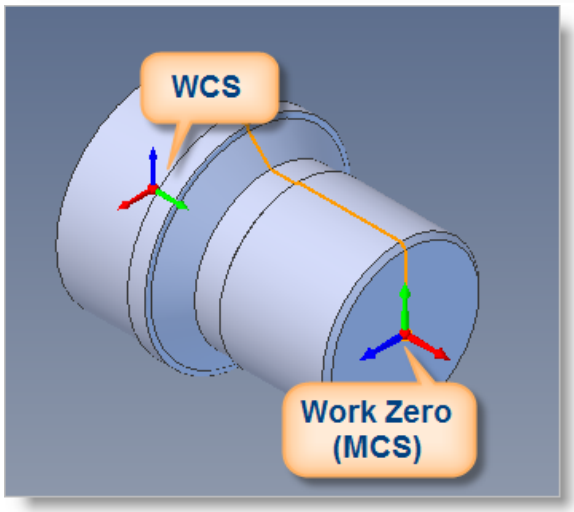

Create Tools

To machine the above part we will now create a diamond insert with a 20 degree relief angle and 0.02 inch tip radius with 0.5 inch inscribed circle radius.

Now we need a tool to turn our part.

1. From the Tools tab in the Machining Objects Browser select Create/Edit Turn Tools to display the dialog.

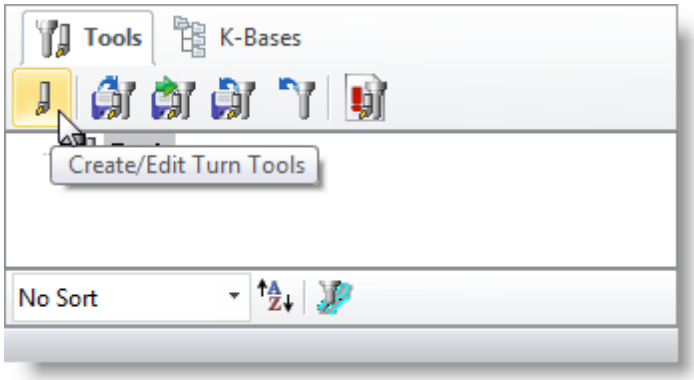

2. Select the Diamond Insert tool icon.

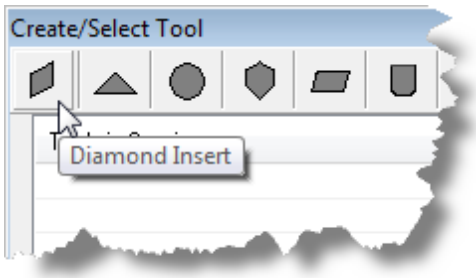

3. Then we'll set the following parameters in the dialog:
   - We'll set Name as Diamond Insert-OD.
   - Inscribed Circle Radius to 0.5
   - Tip Radius to 0.02
   - Tip Angle to 55
   - Relief Angle to 20
   - Orientation to OD Forward

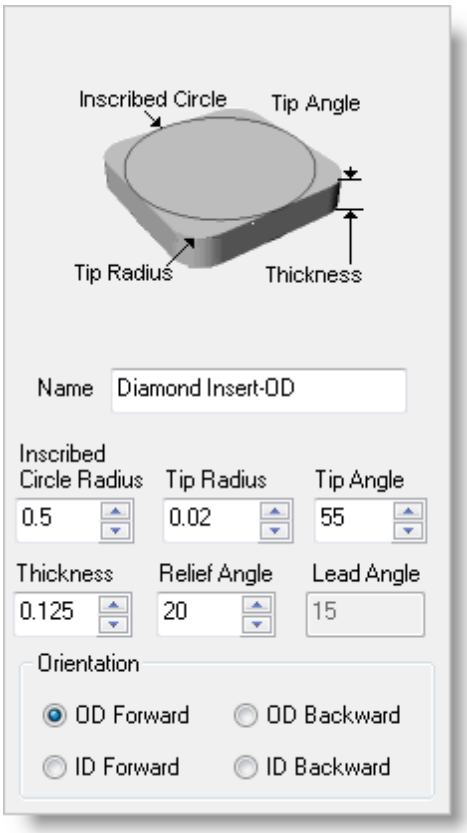

4. Next, we'll switch to the Feeds and Speeds tab and use the following values. For Spindle Parameters we'll set:
   - Speed to 300 RPM
   - Max Speed to 350 RPM

   For Feedrates we'll select IPM and set:
   - Plunge to 5
   - Approach to 7.5
   - Engage to 7.5
   - Cut to 10
   - Retract to 15
   - Departure to 15
   - Transfer to User Rapid

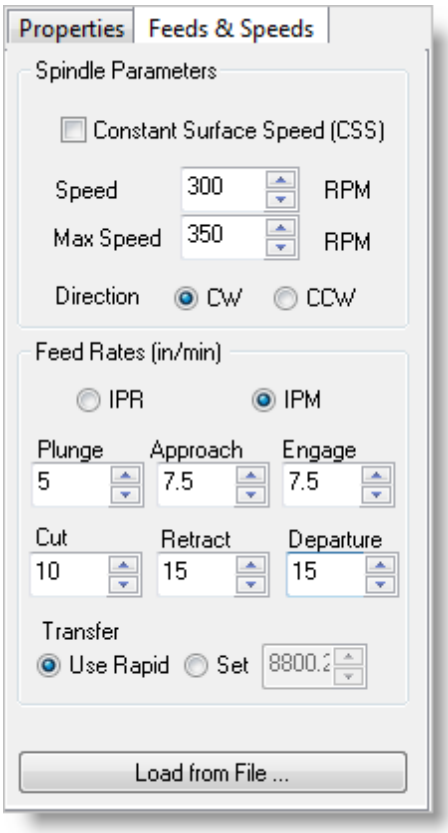

5. Now, we'll pick Save as New Tool.

> You can edit the tool properties and click Save Edits to Tool to save the changes. You can create additional tools by assigning a different Name and specify the tool parameters.

6. Now the tool is created and listed under Tools in Session on the left.

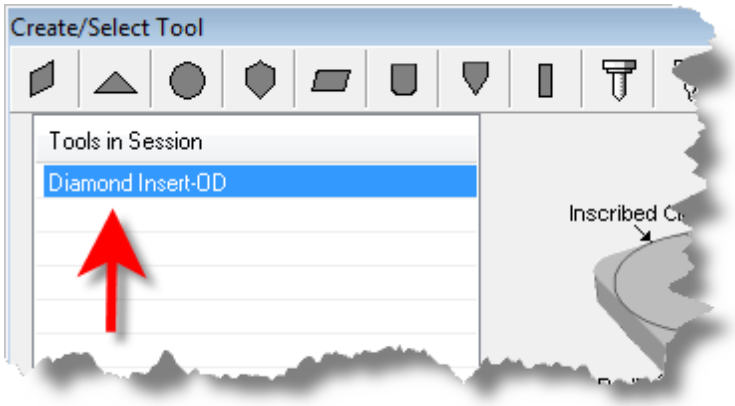

7. Pick OK to close the dialog and notice that the new tool is also listed under the Tools Tab of the Machining Objects Browser.

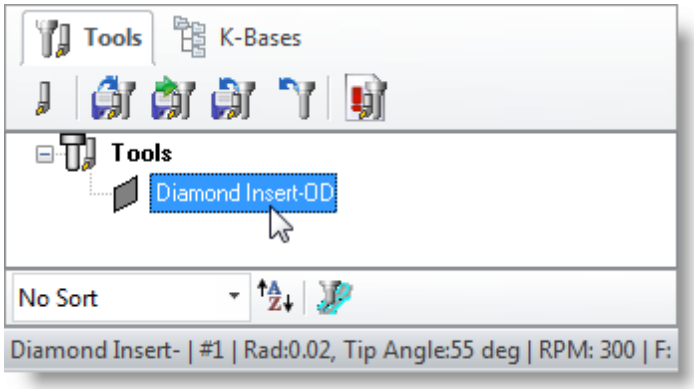

To save Tools to library, Click Save Tool library under Tools tab in Machining Objects Browser and specify folder location and file name in the Save as dialog box. Saving Tool library as Knowledge base files (*.vkb) saves feeds and speeds with tool properties.

Roughing the Outer Diameter

Now were ready to create our Turn Roughing operation for machining the part.

1. From the Program tab select Turning and then Roughing from the menu of operations.

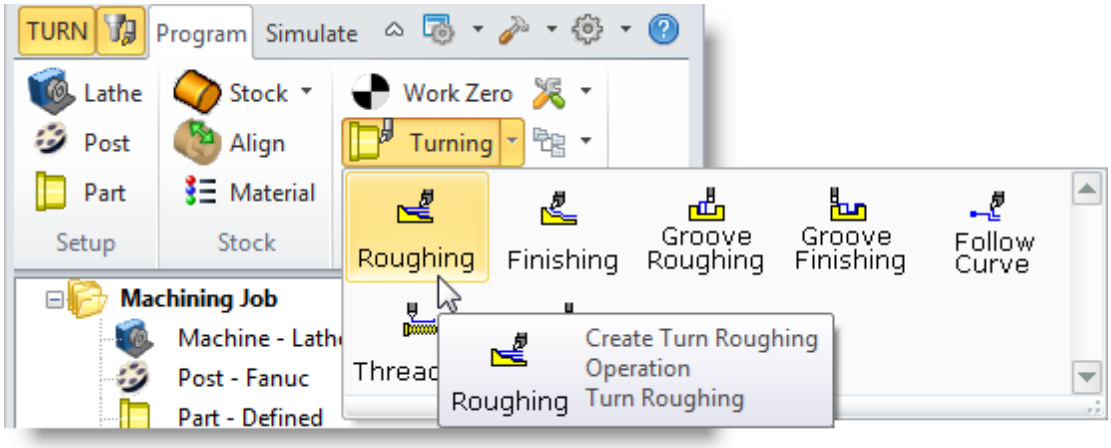

2. This will display the Turn Roughing operation dialog.

5.1 Select Cutting Tool

Next we'll select the cutting tool for the Turn Roughing operation.

1. From the Tool tab we'll select the Diamond Insert-OD tool we just created as the active tool.

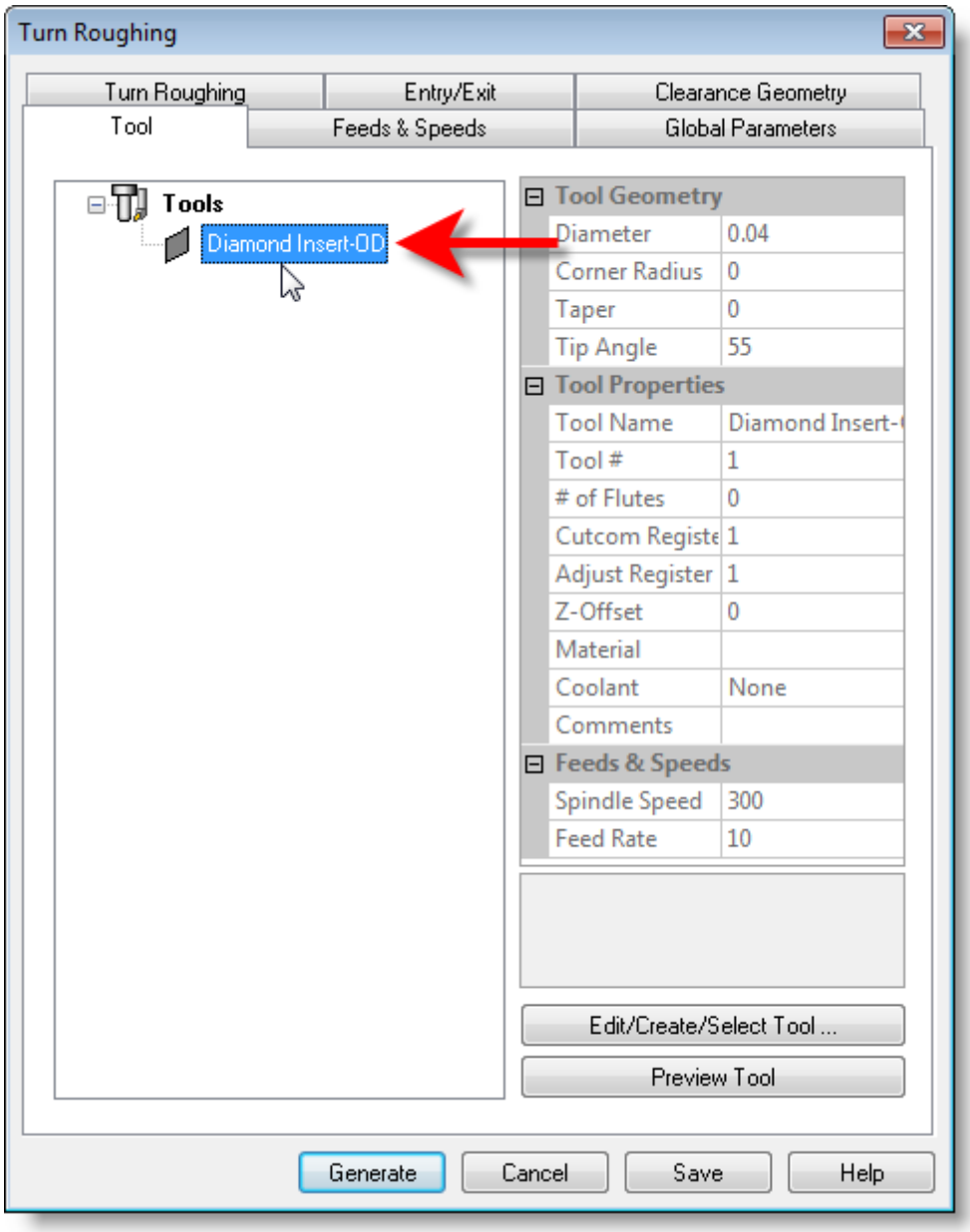

2. The diamond insert is now selected as the active tool.

> The Tool parameters of the currently active tool are always displayed in the status bar at the bottom of the Machining Objects browser as shown below.

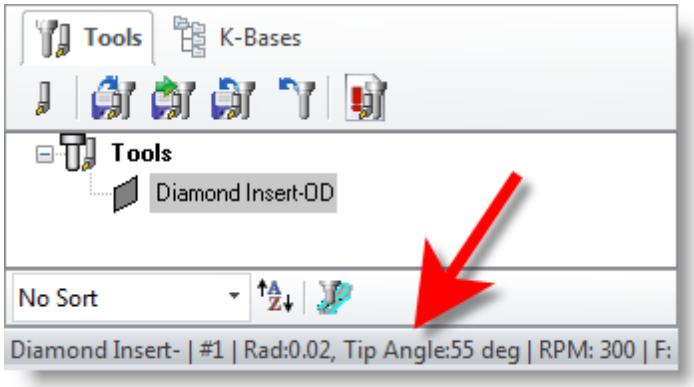

5.2 Set Feeds and Speeds

Next we'll set the Feeds and Speeds for the Turn Roughing operation.

1. Pick the Feeds & Speeds tab of the Turn Roughing dialog.

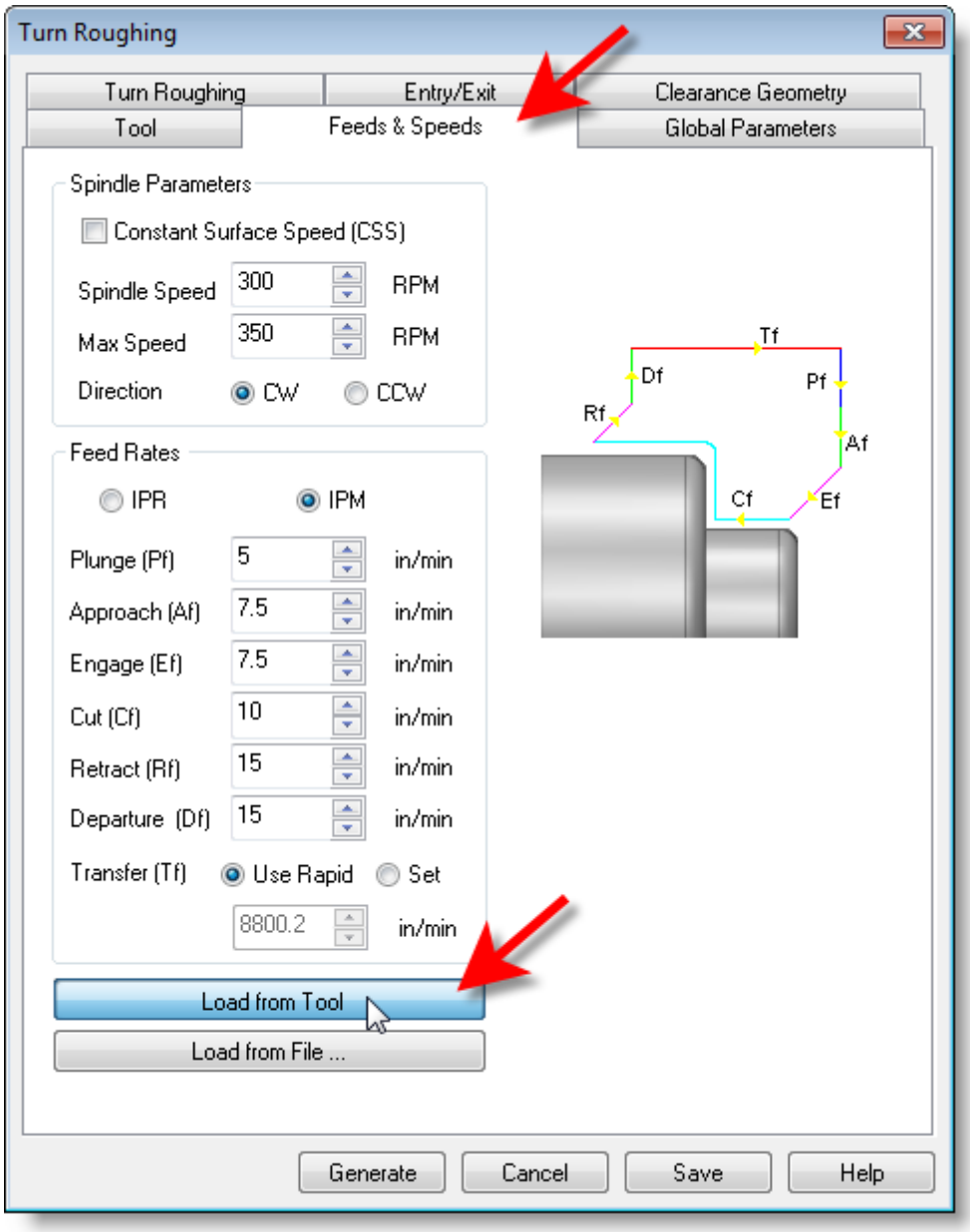

2. Then we'll pick the Load from Tool button. The system will now retrieve the feed and speed parameters that we set when the tool was created and associate them with the current operation.

5.3 Set Clearance Geometry

Next we'll set the Clearance Geometry for the Turn Roughing operation.

1. Select the Clearance Geometry tab of the Turn Roughing dialog.
2. Here, we'll set the Clearance Settings to Automatic and Cut Transfer to Clearance Plane.

In the Automatic mode, the system will determine a safe height for locating the clearance plane. Setting Cut Transfer to Clearance Plane will force all transfer moves to be performed in this computed clearance plane.

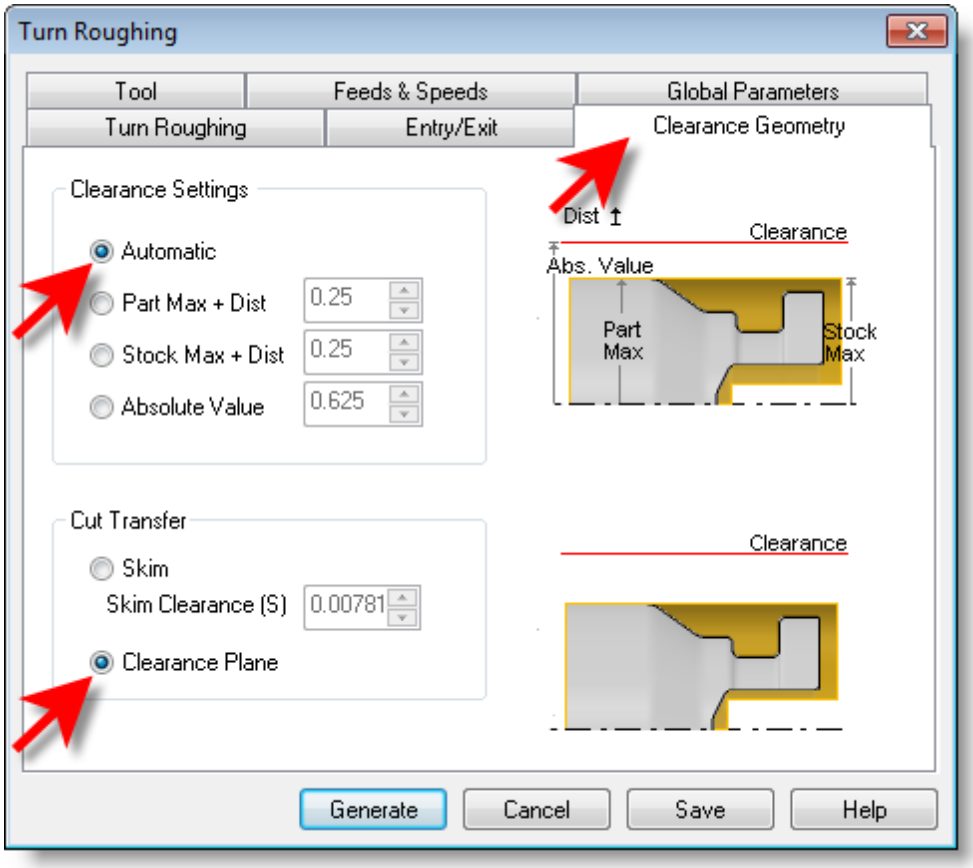

3. When this dialog is active, the clearance plane is shown on the graphics screen.

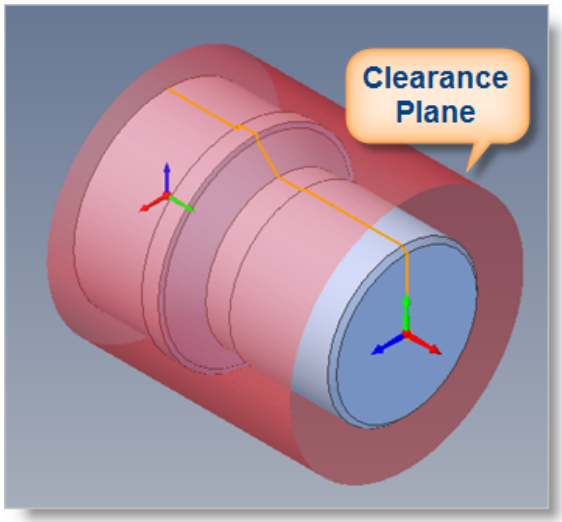

5.4 Set Global Parameters

Next we'll set the Global Parameters for the Turn Roughing operation to specify parameters to control the cutting.

1. Switch to the Global Parameters of the Turn Roughing dialog.
2. Here, we'll set the Approach Type to Outer Diameter.
3. We'll set Stock to 0.01. This means that we'll be leaving a 0.01" thickness on the part after machining.

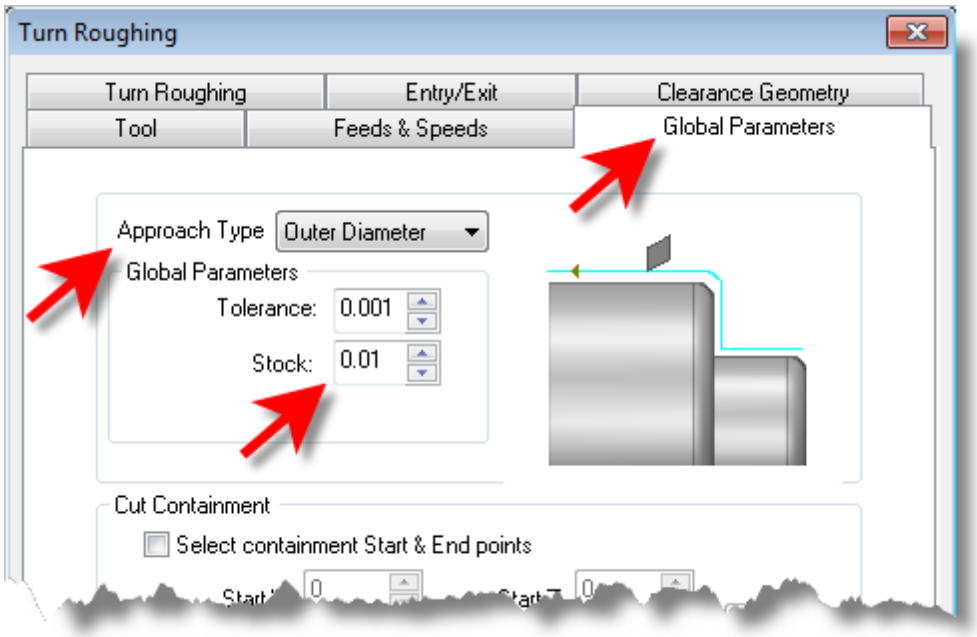

5.5 Set Roughing Parameters

Next we'll set Roughing Parameters for the Turn Roughing operation.

1. Select the Turn Roughing tab of the Turn Roughing dialog.
2. Set Cut Pattern Type to Linear Cuts.
   This will create a cut pattern with straight line cuts. Offset cuts on the other hand will create cuts that are successive offsets of the TURN profile.
3. Set Cut Direction to Positive.
   This will ensure that the cut traverses along the positive Z axis of the Lathe coordinate system.
4. Then uncheck Final Cleanup Pass.
5. Then also set Depth per Cut to 0.0625.

   Note that Depth per Cut is always set to an absolute value.

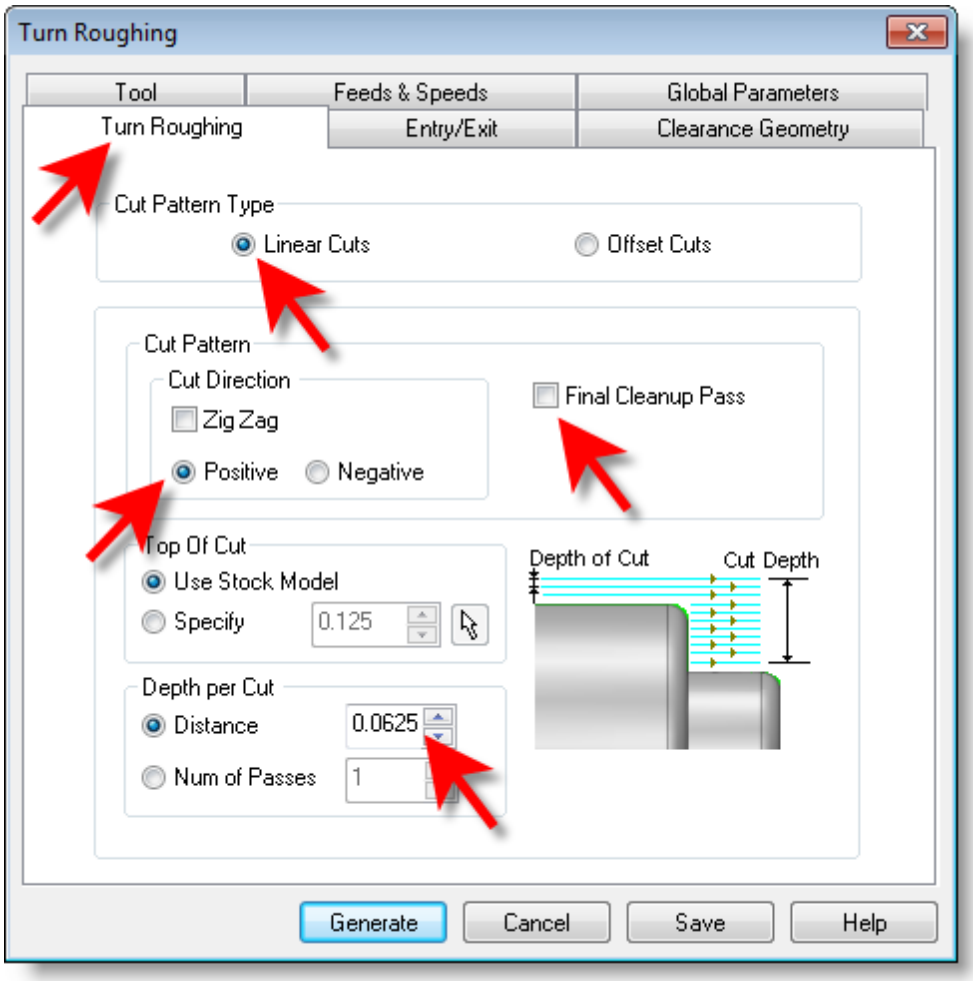

5.6 Set Entry/Exit Parameters

Next we'll set Entry and Exit Parameters for the Turn Roughing operation.

1. Select the Entry/Exit tab of the Turn Roughing dialog.
2. Entry/Exit parameters control how the cutter will engage material as it begins cutting and how it will leave the material as it completes cutting.
3. Select the Entry tab and set the Approach Motion Length (AL) to 0.025.
4. We'll then set the Engage Motion Length (EL) to 0.025 also.

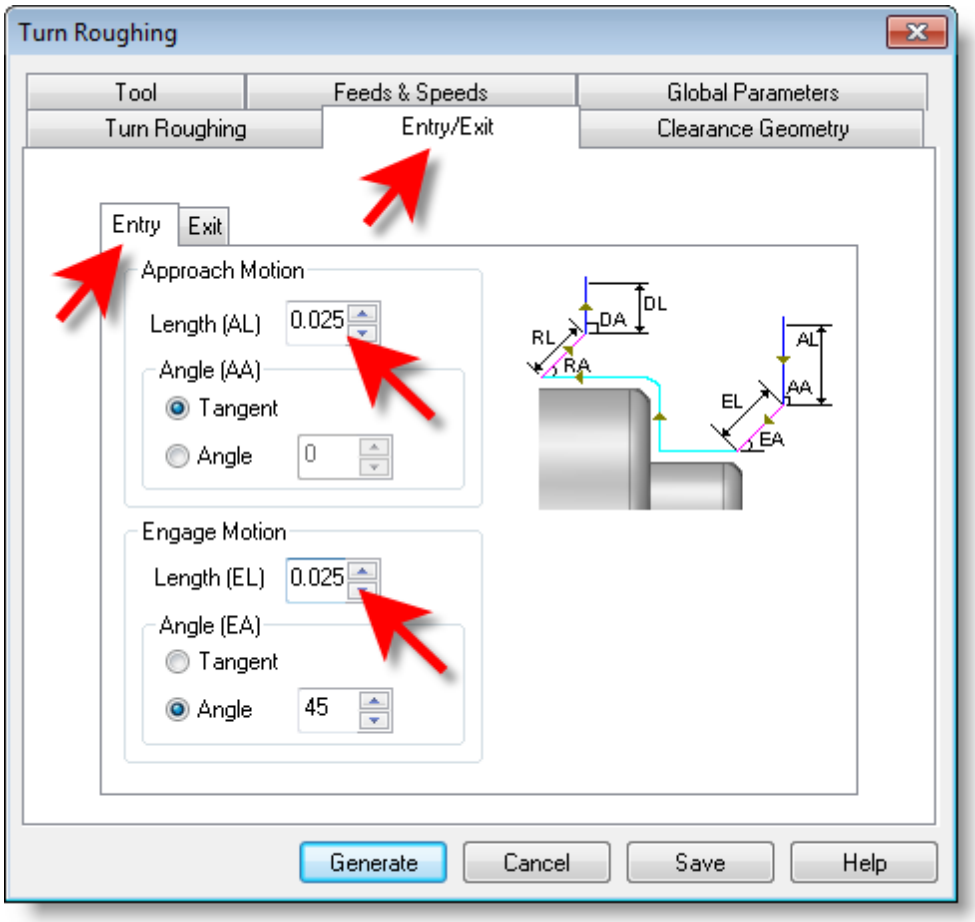

5. Next, we'll switch to Exit tab set the Retract Motion Length (RL) to 0.025 and do the same for the Depart Motion Length (DL).

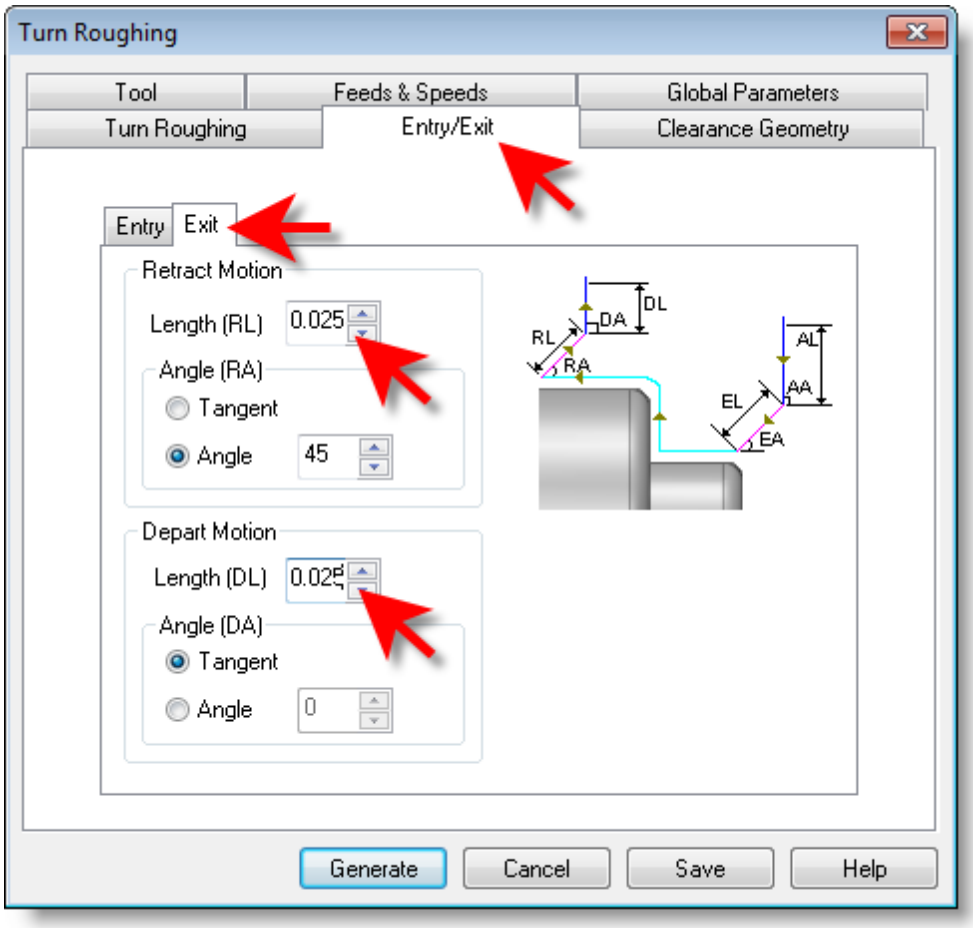

6. Now pick Generate.

   The Turn Roughing toolpath is generated and the operation is listed under Setup 1 in the Machining Browser.

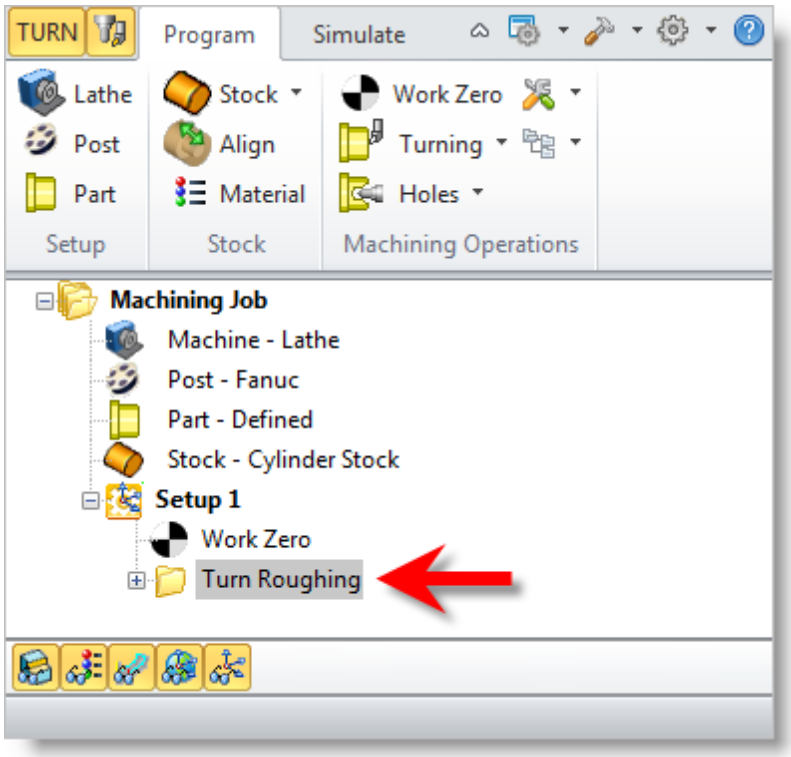

7. Now from the View toolbar in Geomagic, select the Front View and you can see the toolpath displayed in the graphics screen.

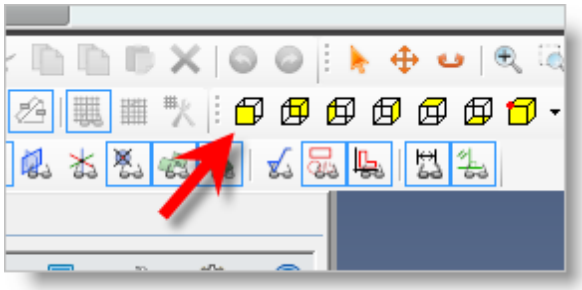

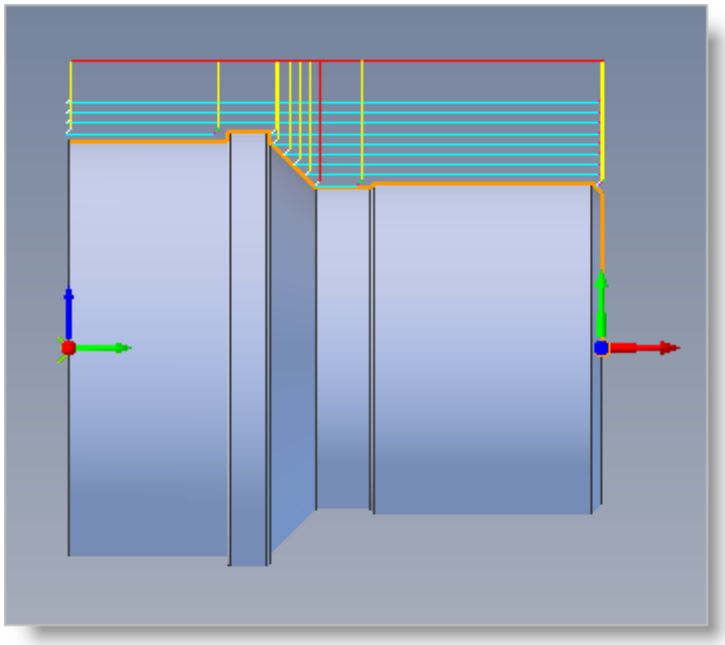

The display of the toolpath in the graphics screen can be turned on/off by selecting Toolpath Visibility icon in the toolbar at the bottom of the Machining Browser.

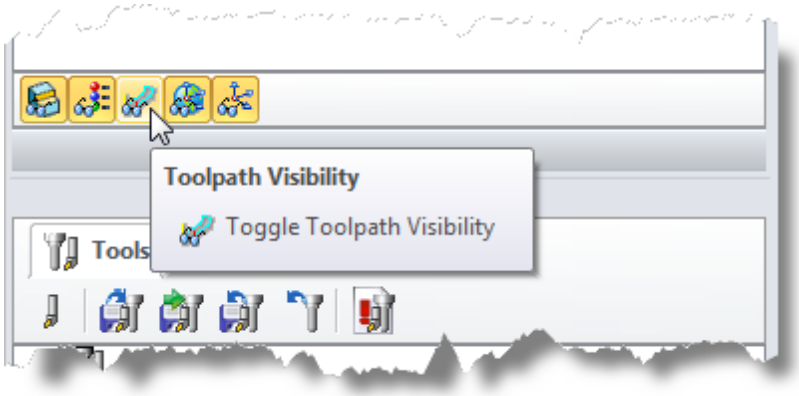

5.7 Simulate the Toolpath

The generated toolpath can now be simulated to display the in-process stock model by using the functions under the Simulate tab in the Machining browser.

1. Switch to the Simulate tab at the top of the Machining Browser.

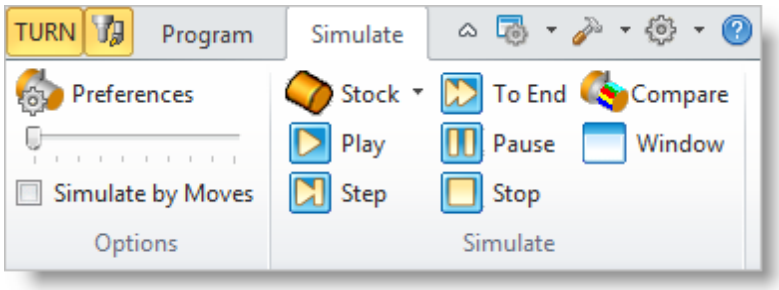

2. From the View toolbar in Geomagic, change back to the Isometric (+X,+Y,+Z) view.

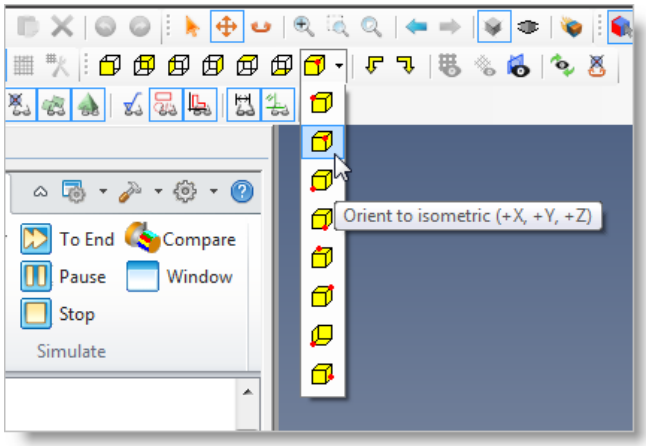

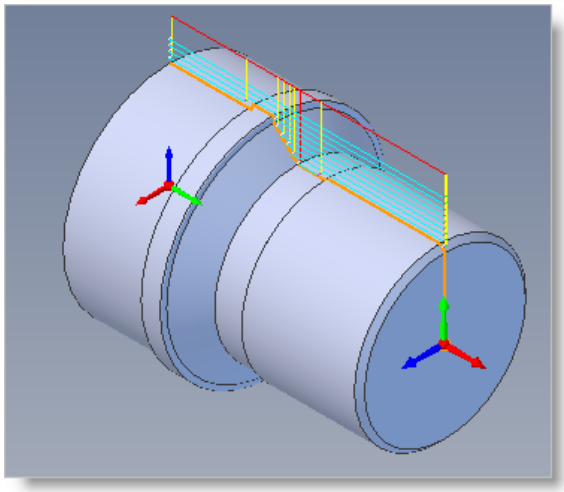

3. In the TURN module the rendering mode of the simulation model can be controlled for better visibility by using cut away section views. Three modes, in addition to the normal rendering mode, are available. These are 3 Quarter, Half and Quarter views. These display modes can be set in the Simulation Preferences dialog. They can be useful when you are machining parts with inner diameter features.

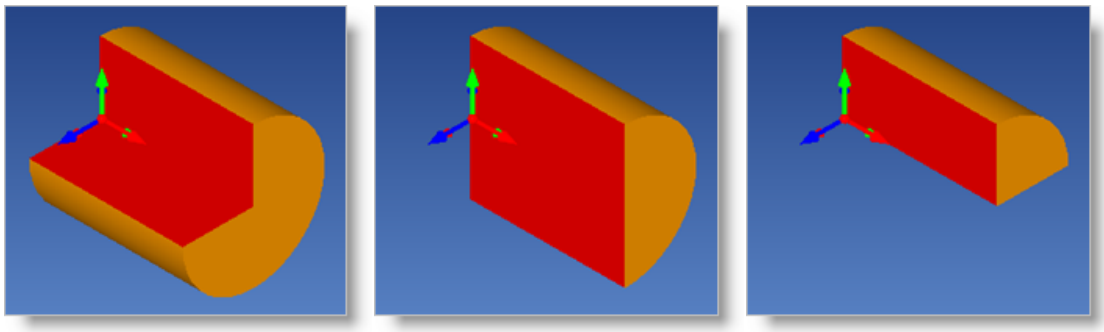

3 Quarter View | Half View | Quarter View

4. From the Simulate tab, select Preferences and set the Simulation display mode to 3 Quarter and then pick OK.

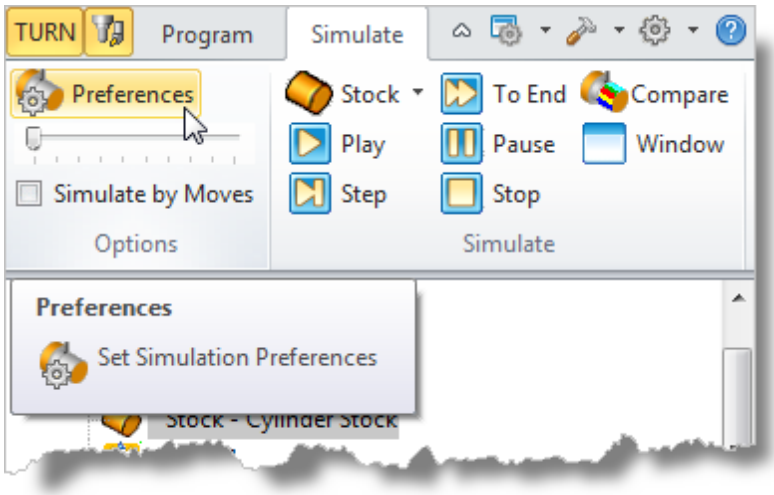

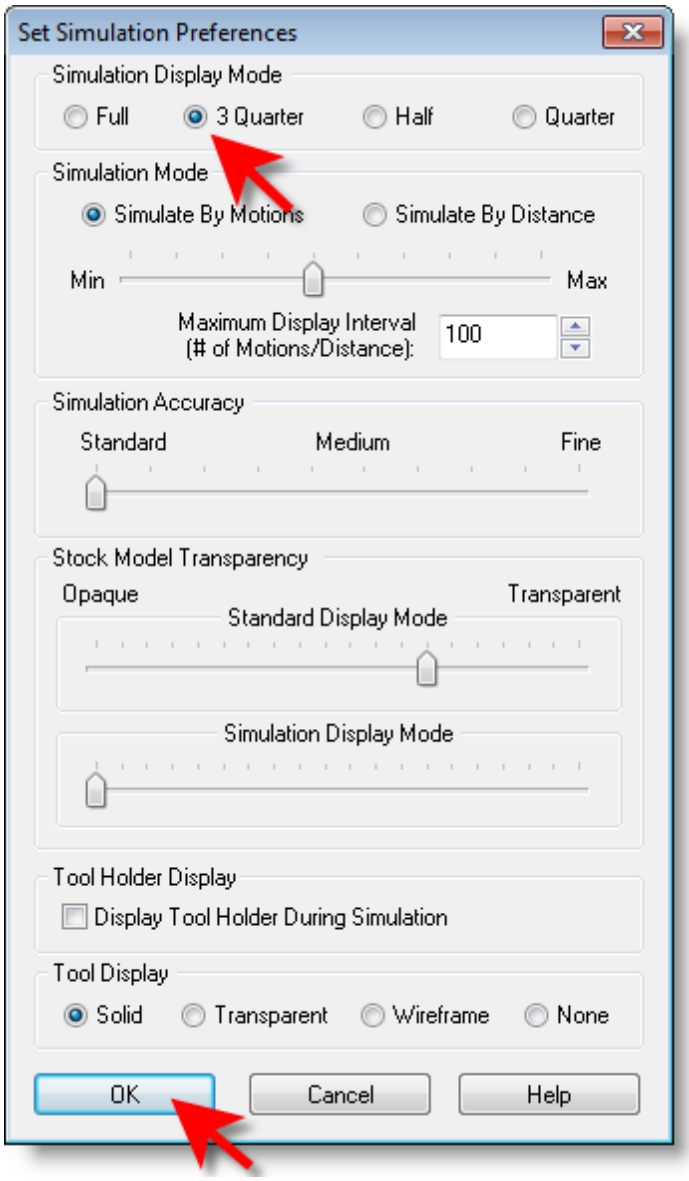

5. From the Simulate tab, uncheck Simulate by Moves and then move the slider to the left to slow down the simulation speed.

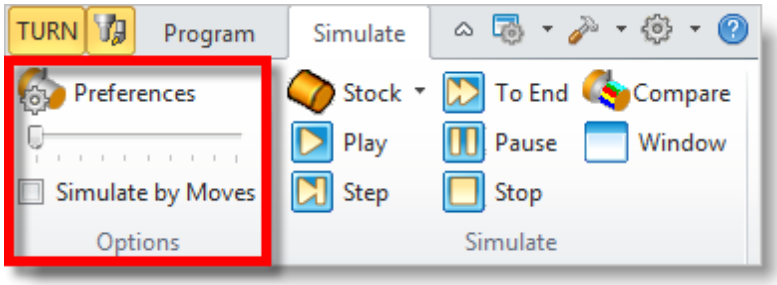

6. Now select the Turn Roughing operation, select the Stock Simulation Window

Window button and then pick Play.

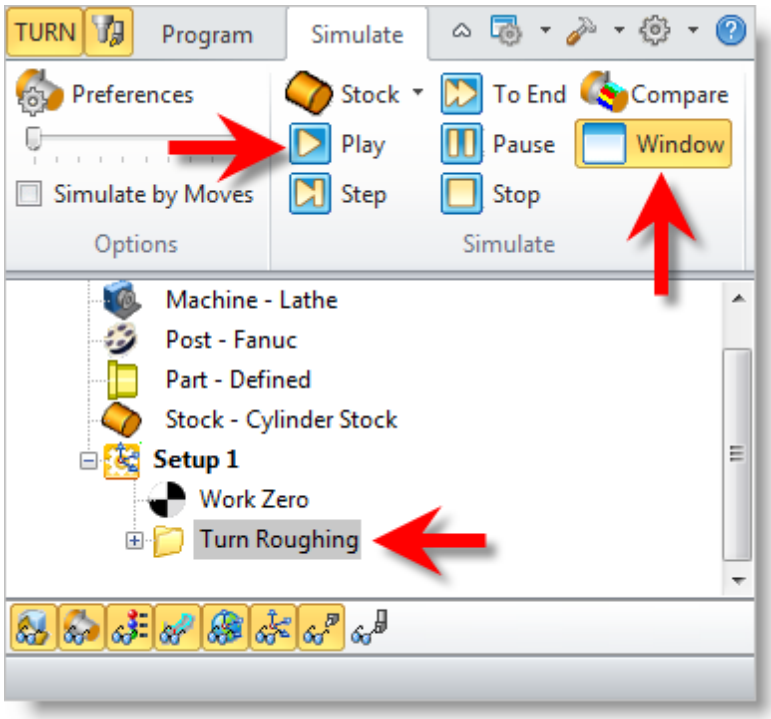

You can stop the simulation at anytime by selecting the Pause button from the Simulation tab. After Pausing, you can choose either Play to continue or Stop to exit the simulation.

7. Once the simulation is complete, the state of the stock model is displayed on the graphics screen.

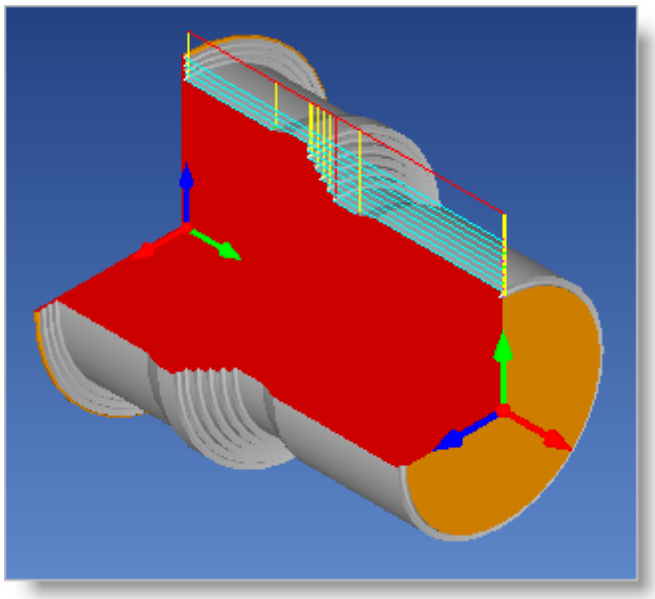

8. To view cut model with textures applied, select the Material Texture Visibility icon located at the base of the Machining Browser.

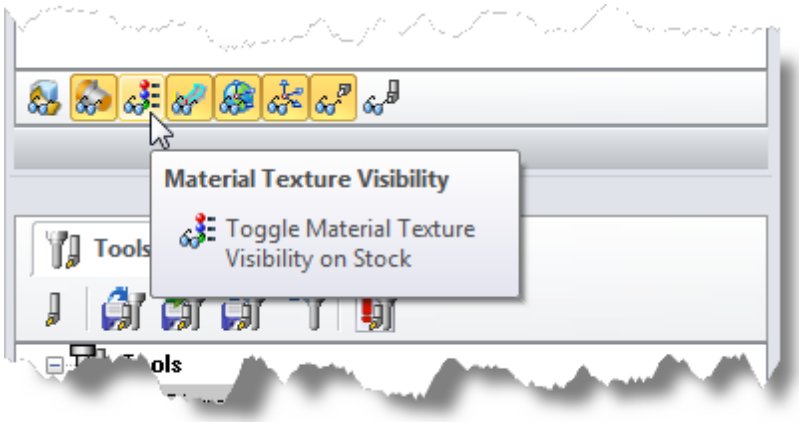

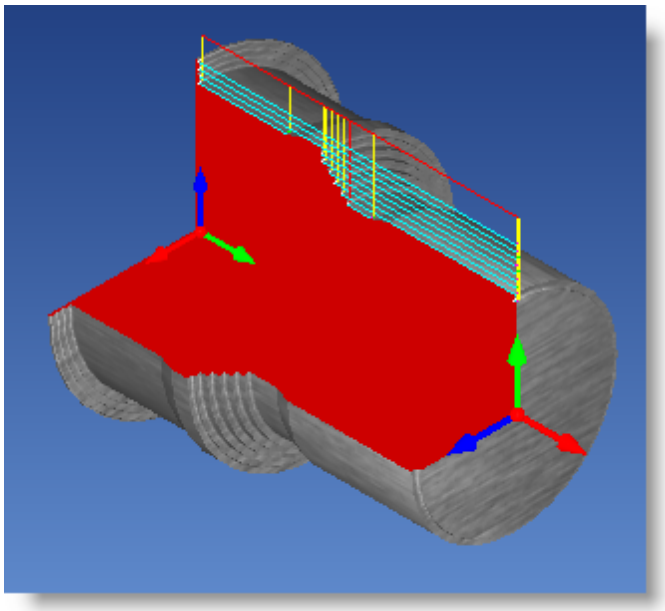

Finishing the Outer Diameter

Now we will turn our attention to finishing the outer diameter of the part. As the part and stock has already been defined in the previous steps, we will use the same tool as we used for roughing to program the Turn Finishing operation.

To do this, follow these steps:

1. First turn off the Stock Simulation Window 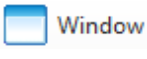

and then switch to Program tab in the Machining Browser.
2. Select Turning and then Finishing from the menu.

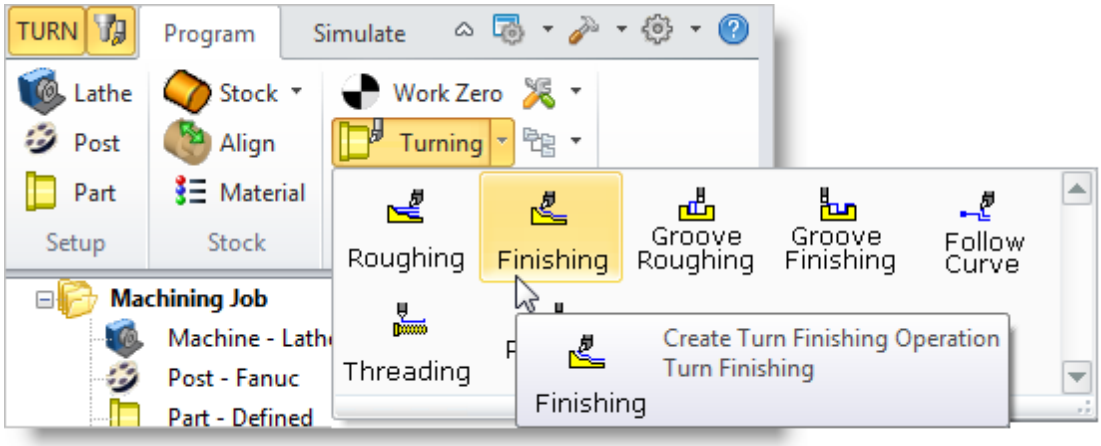

3. This will display the Turn Finishing operation dialog shown below.

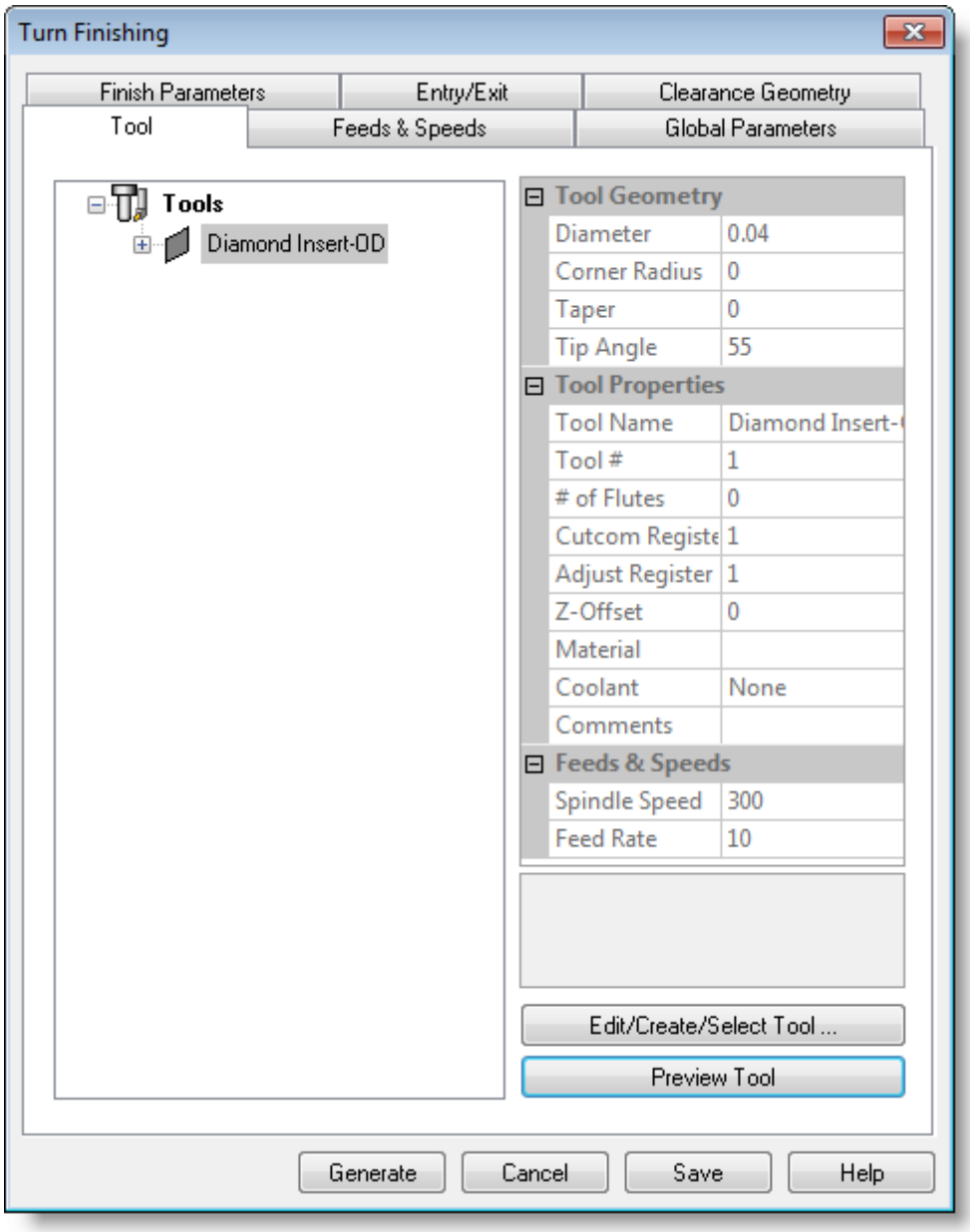

6.1 Set Finishing Parameters

Here we will use the Turn Finishing dialog to set our finishing parameters:

1. From the Tool tab in the Turn Finishing dialog select the Diamond Insert-OD tool.

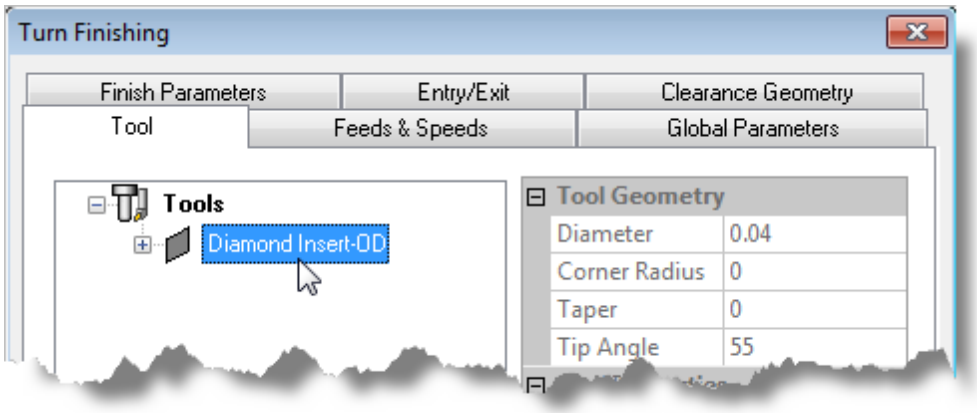

2. Now, pick the Feeds & Speeds tab and select the Load from Tool button. The system will retrieve the feeds and speeds parameters that was set when the tool was defined and associate them with the current operation.

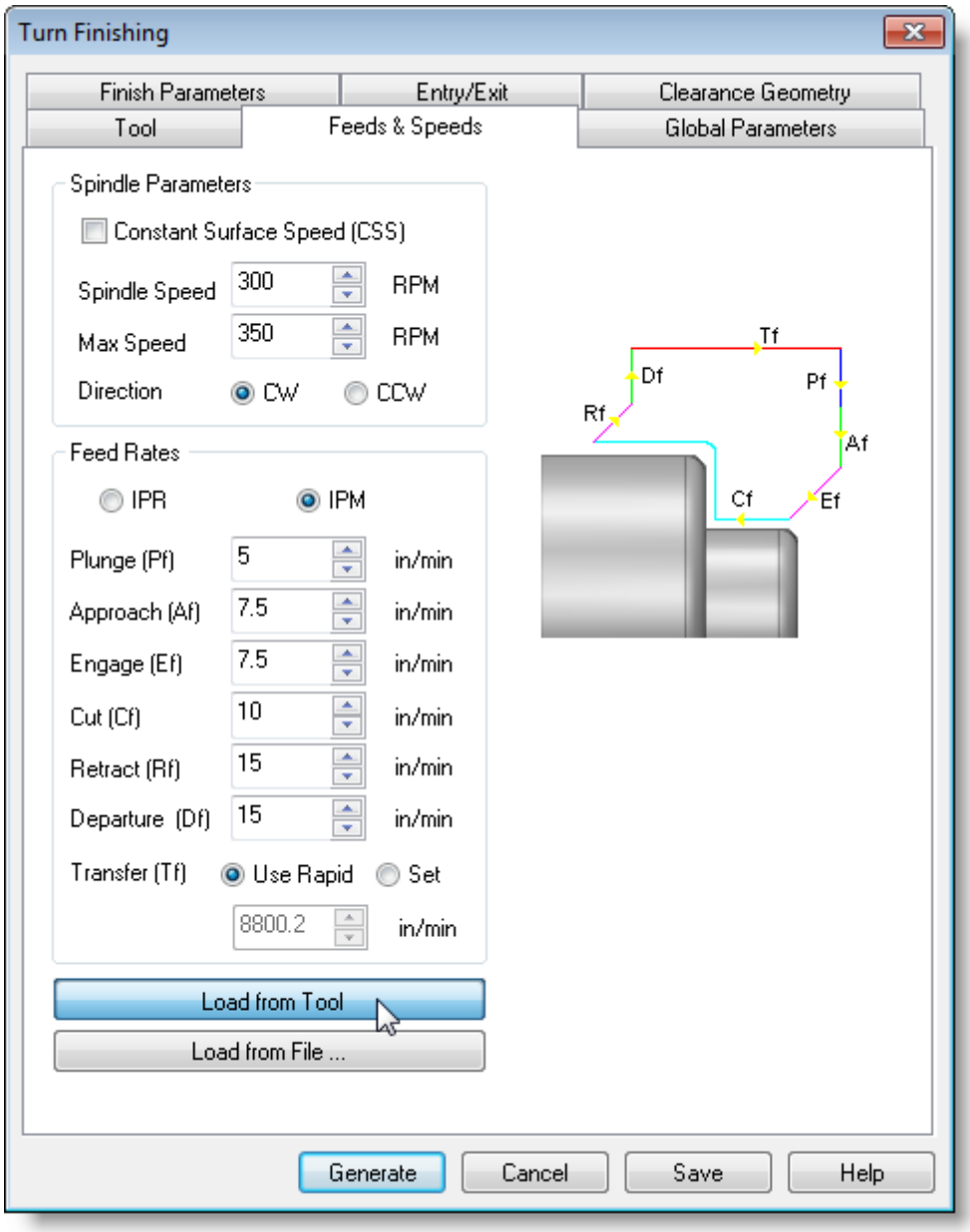

3. Pick the Clearance Geometry tab and set the Clearance Plane Definition to Automatic and Cut Transfer Method to Clearance Plane.

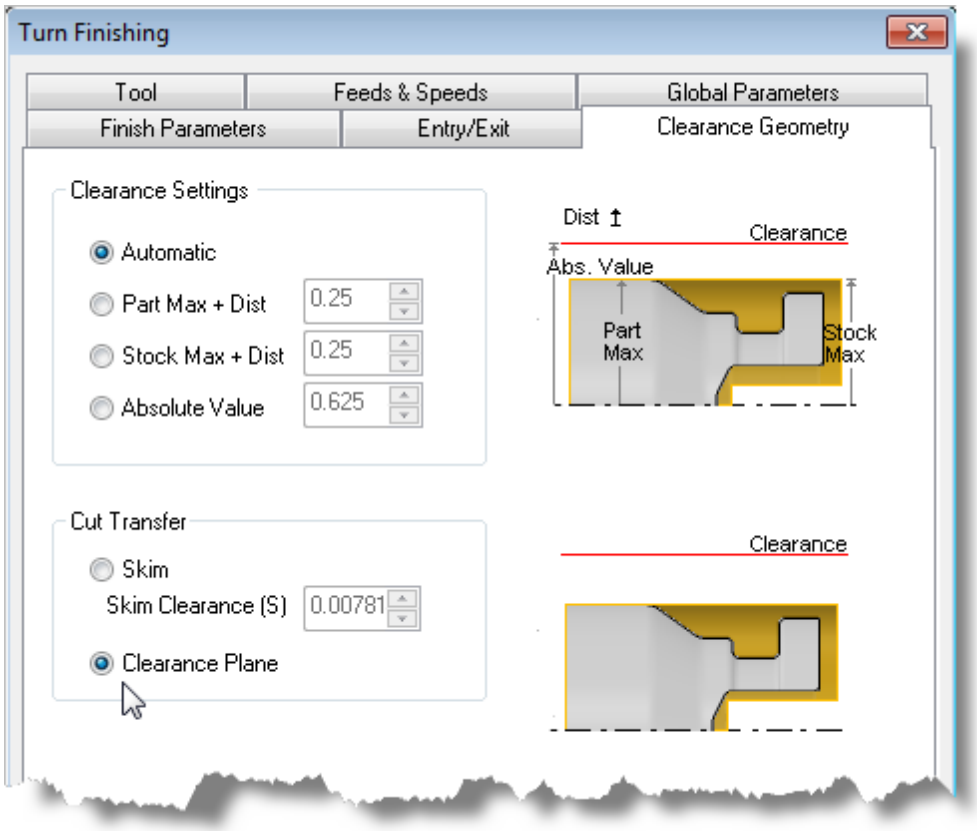

4. Now we'll switch to the Global Parameters tab to specify parameters to control the cutting.
5. Set the Approach Type to Outer Diameter and Stock = 0.
   We will not be leaving any thickness on the part after machining, effectively removing all stock left over from the previous roughing operation.
6. Now under Cut Containment, check the box for Select Start & End Points.
   This allows you to specify an area to contain the toolpath by selecting cut start and end points. This is useful in cases where only a section of the part needs to be machined.
7. In this tutorial, we will graphically select the start and end points from the part to specify cut containment. Click on the Pick button. This minimizes the dialog and prompts you to select start and end points.

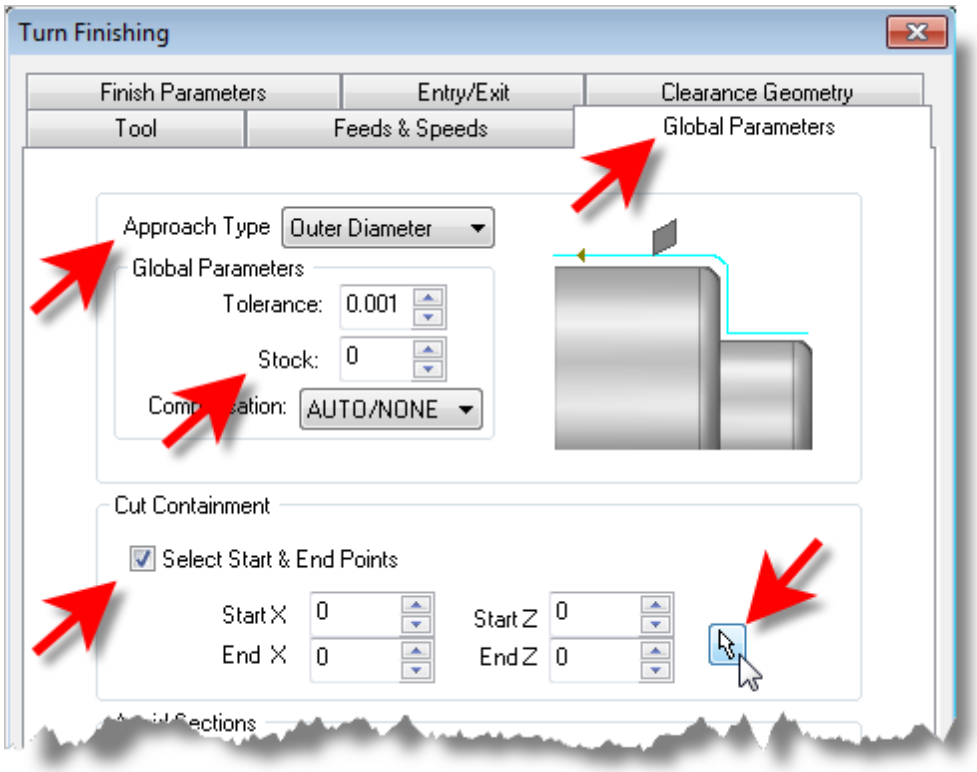

8. Select the start point as shown in the image below.

9. Now select the end point as shown in the image below and then pick the icon to complete the selection.

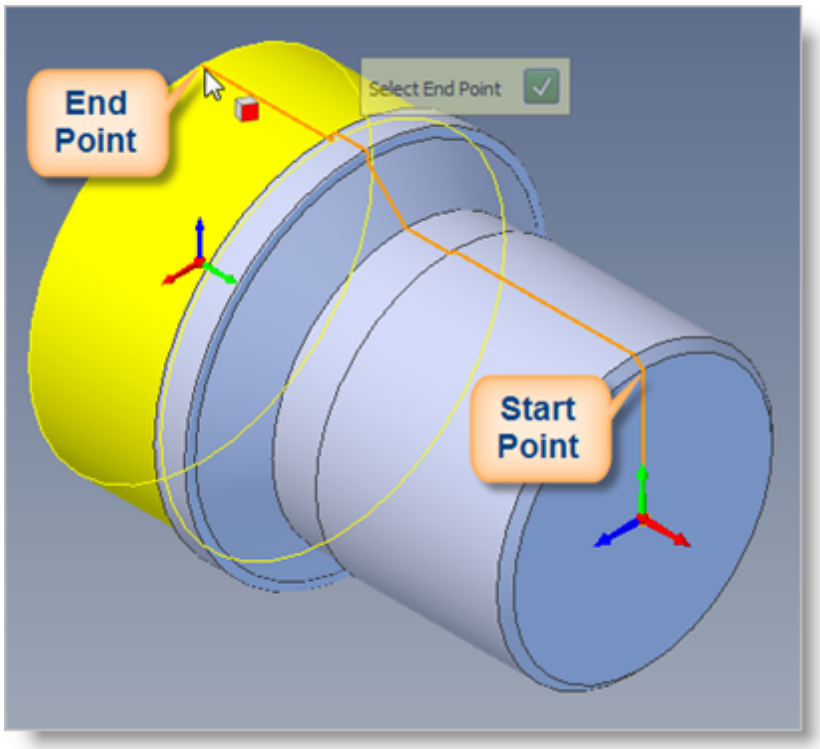

10. The Turn Finishing dialog reappears and displays Start and End point coordinate values for the cut containment.
11. Leaving all other parameters with default settings, we pick Generate. The operation is generated and added to the Machining Job in the Machining Browser below the Turn Roughing operation we previously created.

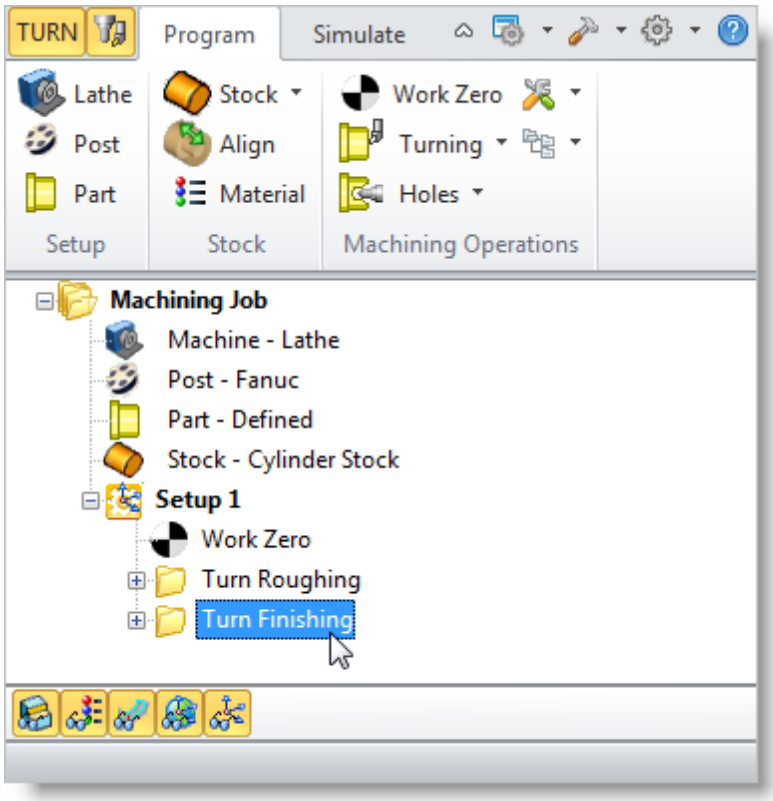

6.2 Simulate the Toolpath

We're now ready to Simulate our Turn Finishing toolpath.

1. First make sure the Turn Finishing toolpath is selected from the Machining Job tree.
2. Select the Simulate tab.

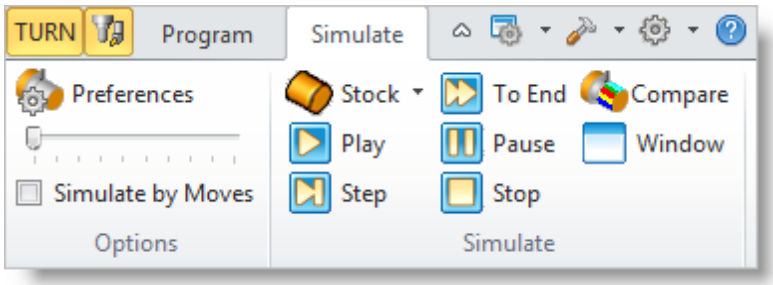

3. From the View toolbar, make sure you are in the Isometric (+X,+Y,+Z) view.

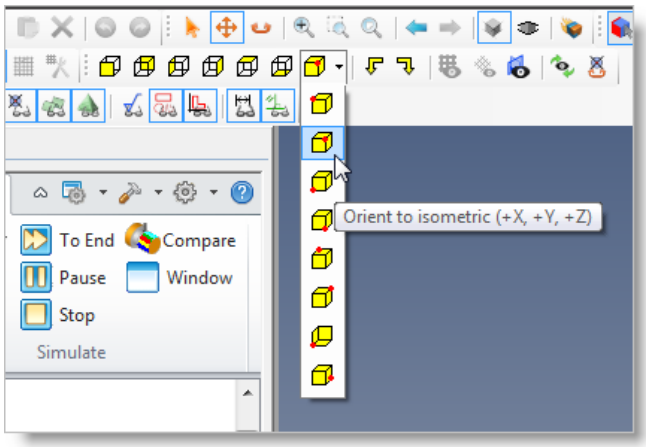

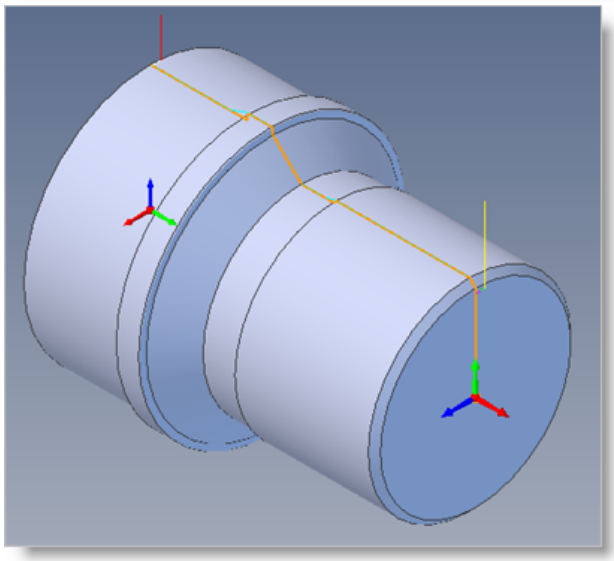

4. Now select the Stock Simulation Window 

and then pick Play.

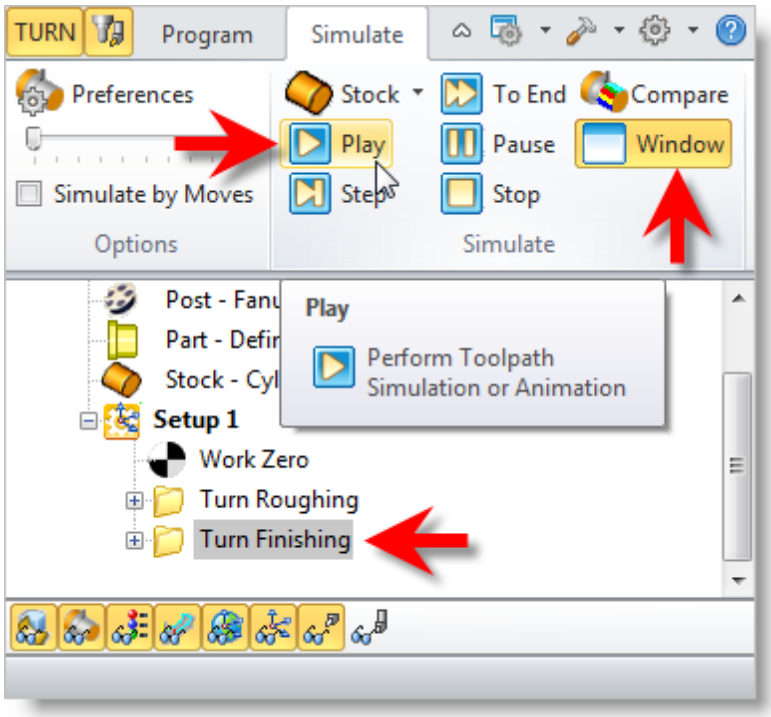

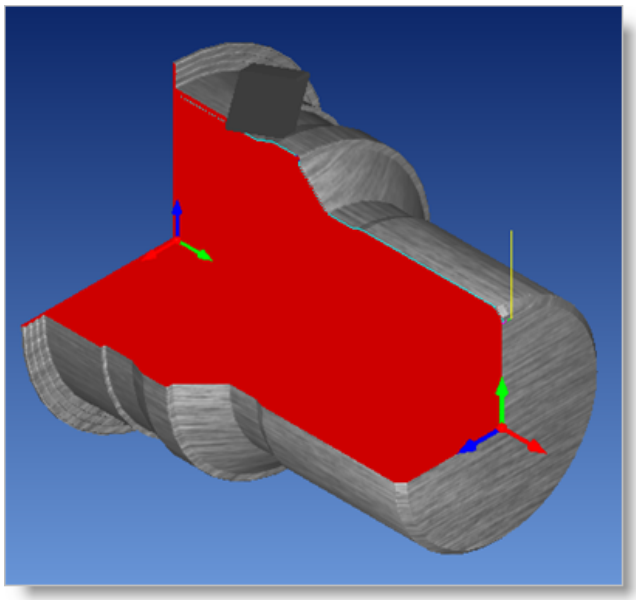

6.3 Post Processing

Now with the toolpaths complete we're ready to post-process to an output text file containing G-codes that can then be sent to the machine tool to actually machine the part.

1. Select Setup 1 from the Machining Browser, right-click and select Post.

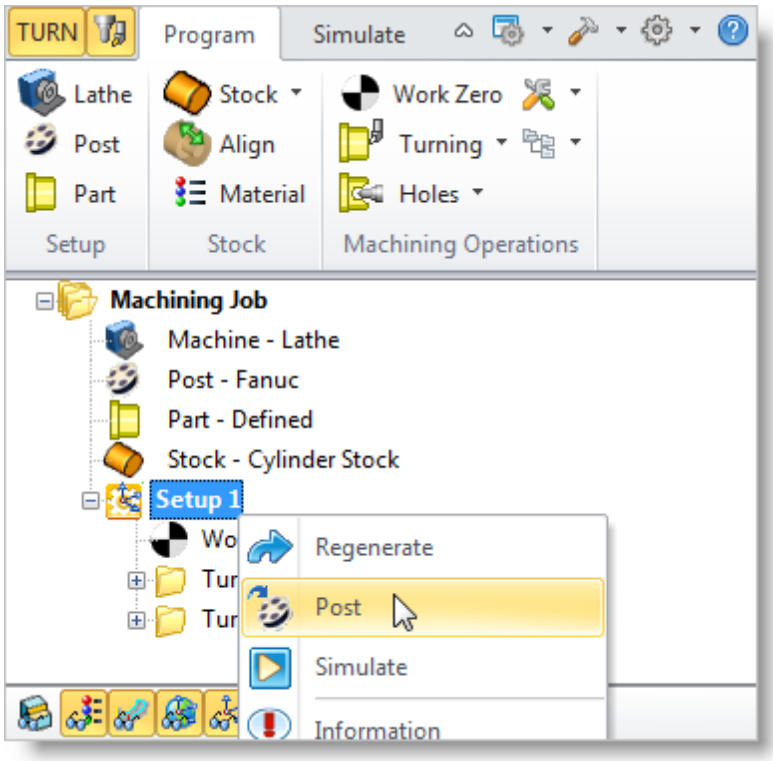

2. This will post-process all operations created under the Setup.
3. By default, the Part file name and the Setup name are appended for the G-code file name. Also by default, the posted G-code file is saved to the folder where the part file is located.

The post by default is set to Haas as specified under the Post processor setup. You can change the post processor by selecting a different one from the drop down menu in the list. The posted g code by default will be saved to the folder where the part file is located.

4. Now pick Post and the G-code file is displayed in Notepad where it can be viewed or edited manually.

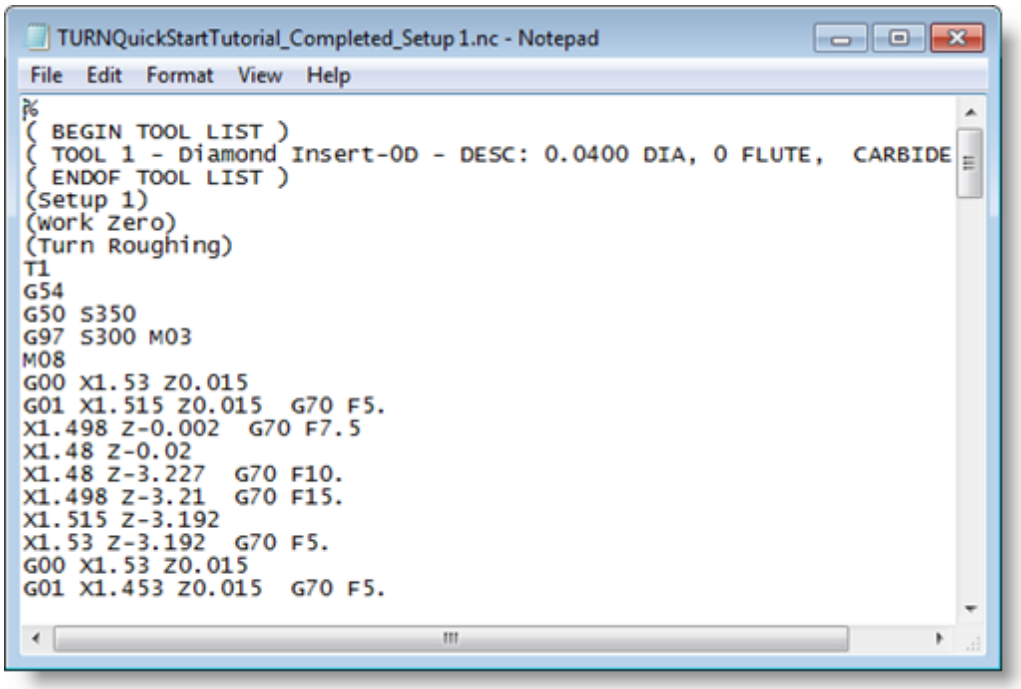

5. Now close Notepad.

Generating Reports

At any time, you can create an Information Report of your Machining Operations.

1. Switch to Program tab in the Machining Browser.
2. Select Setup 1.
3. Right-click and select Information to display and Print the report.

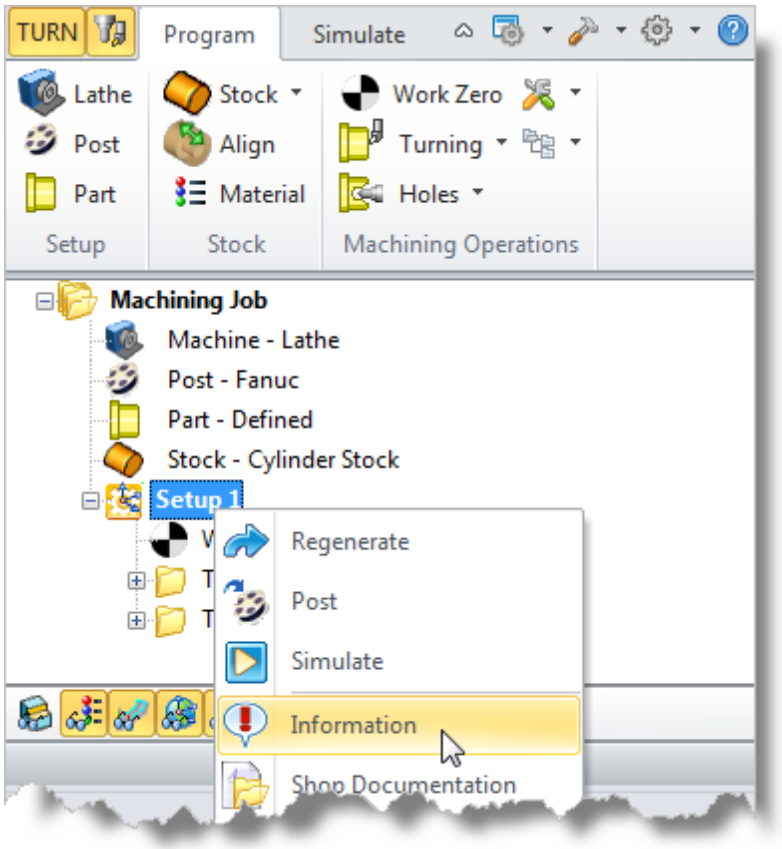

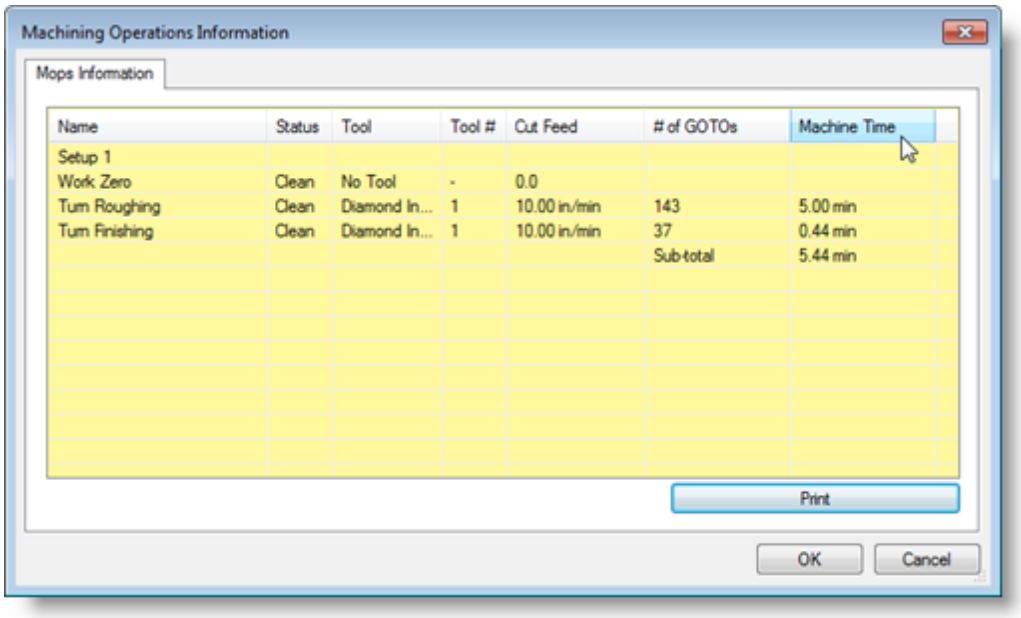

This dialog provides an estimate of the machining time required for the operations in the Setup.

You can perform the same right-click sequence on the Machining Job to determine the estimated machining time for all Setups.

4. Now pick OK to close the Information dialog.

7.1 Generating Shop Documentation

You can also create a Setup Sheet by generating a Shop Document. This is typically used to instruct machine operators on how to setup and machine the part on the CNC machine.

1. Select Setup1 under the Machining Job tree in the Machining Browser.
2. Right-click and select Shop Documentation.

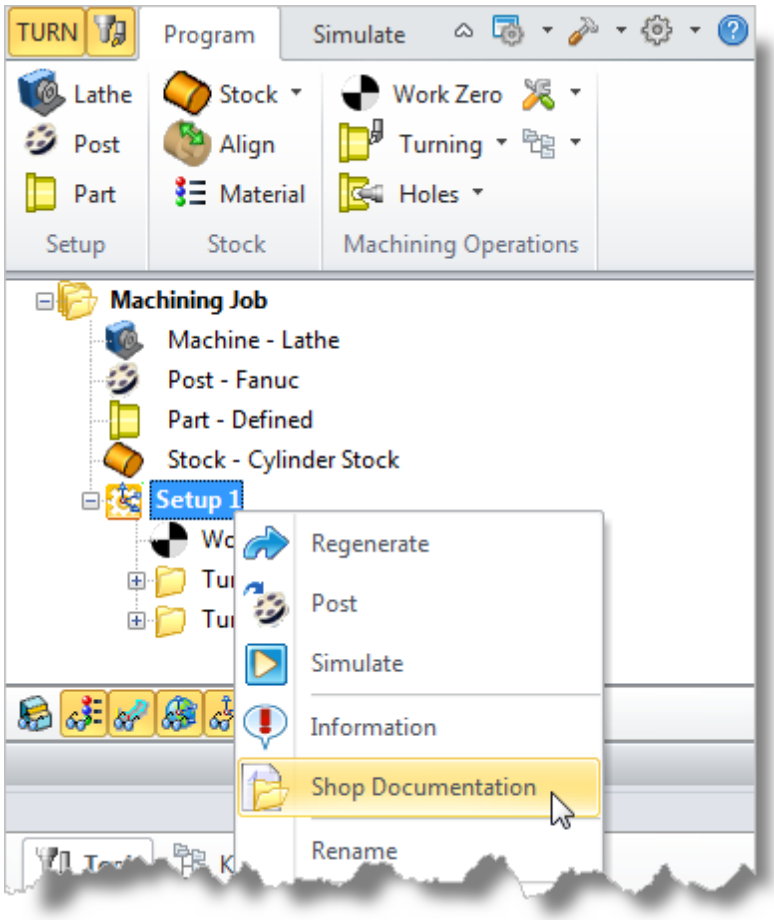

3. Select Template1 and click Save.

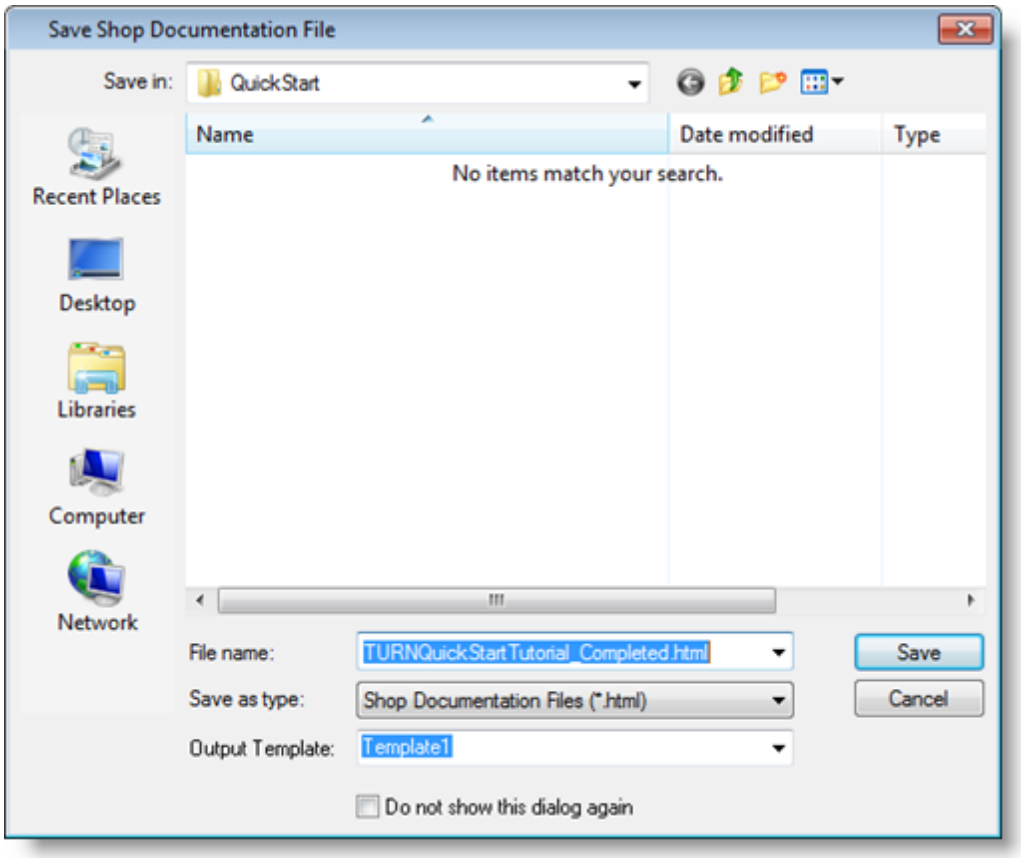

4. This creates an HTML based Shop Document that can be viewed in a web browser. You can select from one of the 2 HTML templates that are shipped with the product and generate shop documentation. Once you have selected the template, a shop documentation html file will be created and saved. This file can then be printed and/or viewed in a web browser such as Internet Explorer.

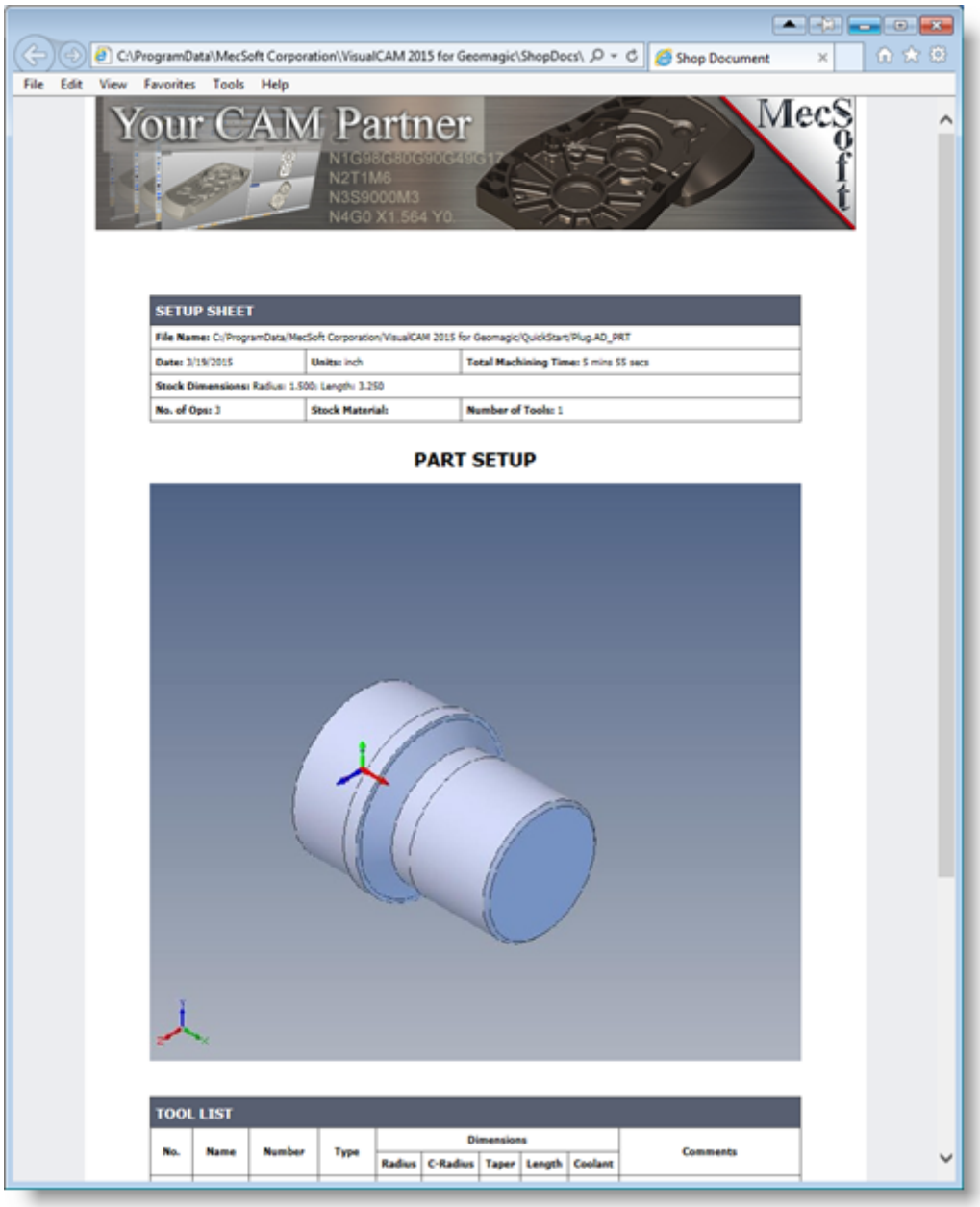

5. You can perform the same right-click sequence on the Machining Job to generate Shop Documentation for all Setups.

Where to go for more help

We have come to the end of the Quick Start Guide of the VisualCAM 2015 for Geomagic TURN module.

If you need additional help please use the following resources:

- The on-line help distributed with the product is a great resource to find reference information on the various functions available
- Apart from the on-line help system you can download other tutorials and projects from MecSoft Corporation's web site at www.mecsoft.com. This will help you get started with using VisualCAM 2015 for Geomagic.
- If you need additional help, or if you have any questions regarding VisualCAM 2015 for Geomagic, you may contact us via e-mail at support@mecsoft.com
- MecSoft offers Online training as well as personalized full day training sessions. Please look up our website or email us at sales@mecsoft.com for further details
- Please do continue to visit our home page to learn about the latest updates to VisualCAM 2015 for Geomagic and any other help material.

Index

- A -

About the TURN Module 4
Align Part and Stock 25

- C -

Clearance Geometry 41, 56
Create Tools 34

- D -

Define the Part Geometry 19

- F -

Finishing the Outer Diameter 55

- G -

Generating Reports 68
Generating Shop Documentation 69

- M -

Machining Strategy 8
Main Programming Steps 8

- P -

Post Processing 64

- R -

Roughing the Outer Diameter 38
Running VisualCAM 2015 for Geomagic 7

- S -

Select Cutting Tool 38, 56
Select the Post Processor to use 15
Set Feeds and Speeds 40, 56
Set Work Zero 31
Setup 30
Simulate the Toolpath 62
Simulate Toolpath 48
Specify Entry/Exit Parameters 44
Specify Global Parameters 43, 56
Specify Material 27

- T -

Turn Roughing 43

- U -

Useful Tips 5
Using this Guide and Associated Part Files 4

- V -

VisualCAM 2015 for Geomagic’s Security Key 7

- W -

Where to go for more help 73